UNECE

Application of the United Nations Framework Classification for Resources (UNFC) to Geothermal Energy Resources

Selected case studies

UNITED NATIONS

UNITED NATIONS ECONOMIC COMMISSION FOR EUROPE

Prepared by the UNECE Expert Group on Resource Classification

ENERGY SERIES No. 51

UNITED NATIONS
NEW YORK AND GENEVA, 2017

NOTE

The designations employed and the presentation of the material in this publication do not imply the expression of any opinion whatsoever on the part of the Secretariat of the United Nations concerning the legal status of any country, territory, city or area, or of its authorities, or concerning the delimitation of its frontiers or boundaries.

Mention of any firm, licensed process or commercial products does not imply endorsement by the United Nations.

ECE/ENERGY/110

UNITED NATIONS PUBLICATION

Sales No. E.17.II.E.15

ISBN 978-92-1-117136-5
eISBN 978-92-1-362719-8

ISSN 1014-7225

Copyright © 2017, United Nations

All rights reserved worldwide

United Nations publication issued by
the Economic Commission for Europe (ECE)

Foreword

Over the last century, different energy and raw material sectors, as well as countries, adopted a range of approaches to classify and manage resources. New challenges to the production, distribution and utilization of energy and raw materials have, however, emerged in recent years that demand innovative approaches for an integrated resource management system. The 2030 Agenda for Sustainable Development defines a clear pathway to address these challenges in a holistic manner.

The United Nations Framework Classification for Resources (UNFC) was developed under the auspices of the United Nations Economic Commission for Europe by a dedicated community of experts drawn from a range of fields, but with the common goal to develop an internationally applicable scheme for the classification, reporting and management of energy and mineral resources. Though initially developed for the mineral and petroleum sectors, UNFC has recently expanded its scope to include renewable energy. Growing awareness and interest in renewable energy resources, including geothermal resources, has highlighted a need to standardize the way in which renewable energy potential is classified and reported.

To facilitate improved global communication in the geothermal sector, the ECE Expert Group on Resource Classification, under the framework of a Memorandum of Understanding between the United Nations Economic Commission for Europe and the International Geothermal Association (IGA), developed specifications for applying UNFC to geothermal energy resources. The specifications were issued in September 2016.

A set of 14 case studies from Australia, Germany, Hungary, Iceland, Italy, Netherlands, New Zealand, Philippines and Russian Federation are presented here to facilitate a better understanding of the specifications and the uniform application of UNFC to geothermal resources. These application examples illustrate the classification of a range of different geothermal resource scenarios in a manner consistent with other energy resources. The approach also provides valuable indicators to the value of UNFC as a tool to support attainment of the Sustainable Development Goals.

Experts in geothermal energy resources, as well as those in other energy and mineral sectors, will find this collection of case studies a useful reference document in their efforts to apply a globally applicable integrated resource management system. I commend all those involved in the preparation, review and verification of these case studies and thank, in particular, the International Geothermal Association for its support.

Olga Algayerova
Executive Secretary
United Nations Economic Commission for Europe

Acknowledgements

The development of these case studies was undertaken by a sub-group (Working Group) of expert volunteers led by Gioia Falcone (Leader) with Miklos Antics, Roy Baria, Larry Bayrante, Paolo Conti, Malcolm Grant, Robert Hogarth, Egill Juliusson, Harmen Mijnlieff, Annamária Nádor, Greg Ussher and Kate Young as members, and Graeme Beardsmore and Horst Rueter as observers.

The International Geothermal Association (IGA) has actively supported this work through its IGA Resources and Reserves Committee (Chaired by Graeme Beardsmore). UNECE and IGA have a Memorandum of Understanding to develop specifications and guidelines for the application of UNFC to geothermal energy.

Face-to-face meetings of the Working Group by means of periodic workshops were made possible by the support of the Energy Sector Management Assistance Program of the World Bank (ESMAP), the United States Department of Energy (DOE) and the Geothermal Resources Council (GRC), with the logistical organization of the IGA Service Company. The Working Group on Renewable Energy Classification of the UNECE Expert Group on Resource Classification, in particular its Chair, Frank Denelle, is thanked for the support and guidance provided in developing and reviewing the case studies.

Contents

Foreword iii
Acknowledgements iv
Contents v
Introduction 1

Case Study 1: Ngatamariki 2

Project summary 2
Ngatamariki project 3
Quantification 3
Product type 3
Reference Point 3
Geothermal Energy Resources 3
UNFC-2009 classification 4
E category classification and subclassification 4
F category classification and subclassification 4
G category classification and subclassification 5
UNFC-2009 Geothermal Energy Resources 5
References 5

Case Study 2: Habanero 6

Project Summary 6
Habanero Project 7
Quantification 8
Geothermal Energy Product 8
Reference Point 8
Geothermal Energy Resources 8
UNFC-2009 classification 8
E category 8
F category 9
G category 9
UNFC-2009 Geothermal Energy Resources 9
References 9
Figure 1 - Induced Micro-Seismicity at Habanero 7

Case Study 3: Insheim **10**

Project Summary 10
Insheim project 11
Quantification 12
Electricity 12
Heat 12
Product type 13
Reference Point 13
Geothermal Energy Resources 13
Electricity 13
Possible Additional Electricity for 85 L/s flow 13
Heat 13
UNFC-2009 classification 13
E category classification and subclassification 14
F category classification and subclassification 14
G category classification and subclassification 14
E category classification and subclassification 15
F category classification and subclassification 15
G category classification and subclassification 16
E category classification and subclassification 17
F category classification and subclassification 17
G category classification and subclassification 17
References 18

Case Study 4: Rotliegend-3 Geothermal Project **19**

Project summary 19
Quantification 19
Reference Point 21
Geothermal Energy Resources 22
UNFC-2009 classification 22
E category classification and subclassification 22
F category classification and subclassification 23
G category classification and subclassification 23
UNFC-2009 classification and quantification 24
Disclaimer 24
References 24
Figure 1 - Input ofr indicative Geothermanl power calculcaion for the project 20
Figure 2 - Probabilistic calculation results 21

Case Study 5: Dutch Rotliegend Play Area – Nationwide **25**

Project summary 25

Geothermal resource classification of Rotliegend Geothermal projects 27

Production projects 27

Exploration projects 29

Rotliegend Play resource estimate 30

Rotliegend Play resource estimate 30

Disclaimer 31

References 31

Figure 1 - Map of data for evaluation of the Rotliegend aquifer 26

Table 1 - Listing of resource estimates per project based on installed power and local hour estimates. Class: E1.2; F1.1; G1, 2, 3 28

Table 2 - UNFC-2009 classification of the Rotliegend Play resource estimate 30

Table 3 - The best estimate of the geothermal resource potential of the Dutch Rotliegend Play 31

Case Study 6: Hódmezővásárhely District Heating **32**

Project summary 32

Quantification 33

Product type 34

Reference Point 34

Project lifetime 34

Geothermal resources 34

UNFC-2009 classification 34

E category classification and subclassification of the present project 35

F category classification and subclassification of the present project 35

G category classification of the present project 35

UNFC-2009 classification and quantification of the present project 36

E category classification and subclassification of the potential future project(s) 36

F category classification and subclassification of the future potential project(s) 36

G category classification of the future potential project(s) 36

UNFC-2009 classification and quantification of the future potential project(s) 37

References 37

Figure 1 - Distribution of uses in Hódmezővásárhely
Total annual production of the entire cascade system (2009): 1,605,407 m^3 33

Appendix 1 - Assumptions of volumetric Monte Carlo assessment 38

Estimation of recharge areas of production wells 38

Figure 1 - Hódmezővásárhely project – producing wells 38

Table 1 - Input values for Monte Carlo 38

Case Study 7: Alto Peak **39**

Project summary 39
Alto Peak project 40
Quantification 40
Product type 40
Reference Point 40
Geothermal Energy Resources 41
UNFC-2009 classification 41
E category classification 41
F category classification and subclassification 41
G category classification 42
UNFC-2009 classification and quantification 43
Disclaimer 43
References 43

Case Study 8: Baslay-Dauin **44**

Project summary 44
Baslay-Dauin project 44
Quantification 45
Product type 45
Reference Point 45
Geothermal Energy Resources 45
UNFC-2009 classification 46
E category classification and subclassification 46
F category classification and subclassification 46
G category classification 47
UNFC-2009 classification and quantification 47
Disclaimer 47
References 48

Case Study 9: Canavese GeoDH System **49**

Project summary 49
Local and hydrogeological context 49
Canavese plant description 50
Quantification 50
Product type 50
Reference Point 51
UNFC-2009 classification 53

E category classification and subclassification 53
F category classification and subclassification 53
G category classification 53
UNFC-2009 classification and quantification 54
Reference 54
Figure 1 - Points of reference for the assessment of GSHP projects in heating mode 51
Figure 2 - Simplified scheme and energy fluxes of "Canavese" plant 52
Table 1 - Nominal capacities and efficiencies of the "Canavese" heat generation plant 52
Table 2 - Energy quantities over Project lifetime (20 years) and points of evaluations 52

Case Study 10: Vertical Ground-Coupled Heat Pump System 55

Project summary 55
Reference building and thermal load 55
Ground reservoir 55
Ground-coupled heat exchangers (vertical borehole heat exchangers) 56
Heat generators: GCHP and back-up unit 56
Quantification 57
Product type 57
Reference Point 57
UNFC-2009 classification 58
E category classification and subclassification 58
F category classification and subclassification 58
G category classification and subclassification 59
UNFC-2009 classification and quantification 59
References 60
Table 1 - Monthly heating and cooling loads for the building 55
Table 2 - Ground thermal properties and BHEs thermal and geometrical characteristics 56
Table 3 - Nominal performances of the GCHP at rating conditions 56
Table 4 - Nominal performances of the AHP at rating conditions 57
Table 5 - Energy quantities over Project lifetime (20 years) and corresponding points of evaluations 58
Table 6 - Main performance indexes and data of the GSHP operation (20 years) 60
Figure 1(a) and 1(b) - Points of evaluation for the assessment of GSHP projects in heating and cooling mode 59
Figure 1(a) - Heating mode 59
Figure 1(b) - Cooling mode 60

Case Study 11: Aggregation GSHP-Potential, North Rhine Westphalia..... 61

GSHP-Potential, North Rhine Westphalia, Germany. project summary 61
Quantification 62
Product type 63
Reference Point 63
UNFC-2009 classification and quantification 63
E category classification 64
F category classification and subclassification 64
G category classification 64
Reference 64
Figure 1 - Points of reference for the assessment of GSHP projects in heating mode..... 63

Case Study 12: Pauzhetsky geothermal field 65

Project summary 65
Quantification 66
Electricity 66
Heat 67
Product type 67
Reference Point 67
Geothermal Energy Resources 67
Electricity for single-flash power plant 67
Possible Electricity for binary power plant 67
Heat 67
UNFC-2009 classification 68
E category classification and subclassification 68
F category classification and subclassification 68
G category classification and subclassification 69
E category classification and subclassification 70
F category classification and subclassification 70
G category classification and subclassification 70
E category classification and subclassification 71
F category classification and subclassification 71
G category classification and subclassification 71
References 72

Case Study 13: Krafla Geothermal Field **73**

Project summary 73
Quantification 74
Product type 75
Reference Point 75
UNFC-2009 classification 76
E category classification and subclassification 76
F category classification and subclassification 76
G category classification and subclassification 76
UNFC-2009 Geothermal Energy Resources 77
References 77

Case Study 14: Krafla Geothermal Field – 50 MW Power Expansion **78**

Project summary 78
Quantification 79
Product type 80
Reference Point 80
UNFC-2009 classification 81
E category classification and subclassification 81
F category classification and subclassification 81
G category classification and subclassification 81
UNFC-2009 Geothermal Energy Resources 82
References 82

Introduction

The best way to understand the applicability of UNFC-2009[1] to Geothermal Energy Resources via the Specifications for the Application of the United Nations Framework Classification for Fossil Energy and Mineral Reserves and Resources 2009 (UNFC-2009) and the Renewables Specifications is to actually test the classification of geothermal case studies.

To this end, simplified application examples are included in this document, with the goal of presenting different possible situations (e.g. mature versus immature projects, country-wide versus operator perspective, deep geothermal systems versus ground source heat pumps, individual project classification versus aggregation) and the logic for classification of their associated Geothermal Energy Resources according to UNFC-2009.

The application examples focus on the classification of the estimated quantities, rather than on their quantification, to complement UNFC-2009 as a classification framework. When applicable, a reference to external literature is made, where the reader can find more background information on the quantities being reported.

The application examples are not examples of formal reporting or disclosure. UNFC-2009 is a voluntary system and does not impose any rules regarding which Categories of resources should be disclosed. Unless mandated or restricted by a government or other regulatory body, the disclosure of resource quantities under UNFC-2009 is entirely at the discretion of the reporter. The same remains valid with regards to the application of UNFC-2009 to Geothermal Energy Resources, independently of the particular Categories and Sub-Categories showed in the application example presented here.

Given that no reporting template is currently offered (or enforced) as part of UNFC-2009, the application examples presented here follow a generic format developed solely for the purpose of consistent presentation to the public within this document, but with no intention of making such format a mandatory template.

The application examples are offered as guidance and do not constitute rules of application of UNFC-2009 to Geothermal Energy Resources.

[1] The United Nations Framework Classification for Resources (UNFC) changed its name in April 2017. Prior to this, UNFC was known as the United Nations Framework Classification for Fossil Energy and Mineral Reserves and Resources 2009 (UNFC-2009). UNFC-2009 is used throughout this publication.

Case Study 1: Ngatamariki

Project Location: Ngatamariki, New Zealand
Data date: 2011
Date of evaluation: May 2015
Quantification method: Simulation
Estimate type (deterministic/probabilistic): Deterministic

Project summary

Ngatamariki in New Zealand was first explored in the 1980s, then left idle until new geophysical and geochemical surveys were done in 2004, and exploration drilling resumed in 2008. The field is located in the Taupo Volcanic Zone of the North Island of New Zealand. Resource assessment and the committal to development were based upon a simulation model using natural state data and an interference test, but no production history. The field and its exploration are described in subsequent publications by Boseley et al (2010 a, b) and Grant & Bixley (2011).

There is an upflow at a depth of water at around 285°C, charging a liquid reservoir of neutral chloride water with good permeability. There is a limited upflow out of the reservoir top in the north-central part of the field, which discharges into a highly-permeable groundwater aquifer. A critical feature of the field that is likely to impact on reservoir management is communication between the deep high temperature reservoir and this shallower aquifer. Geochemistry shows that geothermal fluid rises from the high temperature reservoir into this aquifer where it mixes with cool groundwater, and then flows northward, feeding surface activity.

This conceptual model, with interconnected deep reservoir and shallow aquifers, was the basis of the simulation. The simulation used a single-porosity formulation. The model has a deep high temperature recharge, and outflows (represented in the model as wells) at the springs. Reservoir temperatures in all wells were matched. An interference test was conducted among the deep wells by discharging three wells for varying periods and monitoring pressure in well NM2. The model was then used to simulate the effects of production and injection over 50 years. The pressure-temperature field was used as input to compute subsidence. As there is no production history to provide calibration, the model is not fully constrained and these simulated results could be significantly in error. However, the model has highlighted the significant physical processes that might control long-term reservoir behaviour. It identified the possibility of significant flow of cool fluids for the shallow cool aquifers to the deep reservoir which constrains possible development options, and management plans emphasize pressure maintenance as important.

Forecast runs showed that the project could support an 82 MW_e(net) development. These results were then used in an application for support resource consents (New Zealand environmental allocation rights to the resource), and the decision by the developer to proceed. The proposed development required the drilling of a few additional wells, some of which were drilled at wide diameter, to take advantage of the good permeability. There would be a central group of production wells, with injection wells to the north and south field margins.

The assessment was made as of the time of grant of resource consents and internal financial approval. At this time the developer had secured land access, had drilled and tested some production wells and one injection well, all with good results. There were plans for a steamfield layout and power plant.

This assessment is made only on the basis of the information publicly available and reported in the four references below.

Ngatamariki project

Ngatamariki field area has been defined by a recent resistivity (MT) survey. By the end of 2009, the following information was available: 6 drilled wells, of which 4 were productive. One of those four producers was designated for injection. There were completion tests on all wells and production tests of the producers, plus an interference test. There was a reservoir simulation using this information. It produced a match to the initial state P&T and the interference test. There is no production history and consequently no history match.

Quantification

The simulation was a component of the consent application and modelled a development of 82 MW_e (net), for a period of 50 years, however the defined project was for a development of 35 years. A power density estimate gives 86 MW_e for 30 years and is used to confirm G1.

The quantification estimate derives from the reservoir simulation, plus power density. This is a deterministic assessment, with a single development plan tested. Only one simulation scenario was presented. The simulation provides the best estimate (G1+G2). Power density was then used as a second estimate: 500m circles were drawn around the productive wells NM2, NM3, NM5 and NM7, but not including NM6 which is to be used for injection. A contour around these circles covers 4.3 km^2. With a reservoir temperature of 275°C and good permeability, a power density of 20 MW_e/km^2 is achieved in analogous fields, giving a capacity of 86 MW_e for 30 years, or 82 MW_e for 31.5 years.

The economic assumptions are for a power station of existing standard geothermal design, supplying power into New Zealand's national grid. The developer is an electricity generator and retailer with market access.

Product type

The product produced is electricity.

Reference Point

The reference point is at the station switchyard, where power is exported to the national grid. Internal power use has already been subtracted.

Geothermal Energy Resources

Geothermal Energy Resources:

Low estimate:	80 PJ
Best estimate:	89 PJ

UNFC-2009 classification

E category classification and subclassification

Category	*UNFC-2009 definition*	*Reasoning for classification*
E1	Extraction and sale has been confirmed to be economically viable	Well testing and simulation have shown sustained discharge is possible and flow rates are economic. The project has resource consents and final financial approval in 2011. Consents were issued for 35 years, so that the project is defined for this period. The classification of E1.1 applies to the energy to be produced over this period only.
Sub-category	*UNFC-2009 definition*	
E1.1	Extraction and sale is economic on the basis of current market conditions and realistic assumptions of future market conditions	
Category	*UNFC-2009 definition*	*Reasoning for classification*
E3	Extraction and sale is not expected to become economically viable in the foreseeable future or evaluation is at too early a stage to determine economic viability.	The simulation showed production could be sustained for 50 years. However, the proposed development is for 35 years only. The extra 15-year period would be a separate project and would fall here.

F category classification and subclassification

Category	*UNFC-2009 definition*	*Reasoning for classification*
F1	Feasibility of extraction by a defined development project or mining operation has been confirmed	Exploration, well testing, simulation and development plans are all complete.
Sub-category	*UNFC-2009 definition*	
F1.3	Sufficiently detailed studies have been completed to demonstrate the feasibility of extraction by implementing a defined development project or mining operation.	
F2	Feasibility of extraction by a defined development project or mining operation is subject to further evaluation.	There are preliminary studies (i.e. the simulation) indicating the feasibility of continuing production beyond 35 years, and a project to assess this resource would lie here.

G category classification and subclassification

Category	*UNFC-2009 definition*	*Reasoning for classification*
G1 *	Quantities associated with a known deposit that can be estimated with a high level of confidence.	The combination of the power density method and the simulation give high confidence on the estimate.
G2 *	Quantities associated with a known deposit that can be estimated with a moderate level of confidence.	Wells have been tested and a simulation completed based upon natural state and interference information. There is no production history and consequently no match to that history. Because of the lack of history confidence is moderate.

* Note that the classification as G1 and G2 was based on an evaluation of public domain information only and a final classification, including the provision of a G3 estimate, would be required to provide an indication of the full range of uncertainty in the estimate.

UNFC-2009 Geothermal Energy Resources

Classification	*Energy Quantity*	*Supplemental information*
UNFC-2009 Class	Use energy units	
E1.1; F1.3; G1	80PJ * (2 500# MW_eyr)	82 MW_e for 31.5 years;
E1.1; F1.3; G2	9PJ * (300* MW_eyr)	82 MW_e for 3.5 years; incremental to G1, with G1+G2 representing the best estimate.

* Rounded to one significant figure.

Rounded to two significant figures.

References

Boseley, C., Cumming, W., Urzúa-Monsalve, L., Powell, T., & Grant, M., 2010a "A resource conceptual model for the Ngatamariki geothermal field based on recent exploration well drilling and 3D MT resistivity imaging", World Geothermal Congress

Boseley, C., Grant, M. A., Burnell, J. & Ricketts, B. 2010b. Ngatamariki Project Update. Transactions, Geothermal Resources Council, v34, pp. 177-182

Grant, M.A., & Bixley, P.F., 2011 "Geothermal Reservoir Engineering, 2nd Edition" Academic Press, New York.

http://www.voxy.co.nz/national/ngatamariki-consents-granted-ew-and-taupo-dc/5/48346

Case Study 2: Habanero

Project Location: Innamincka, South Australia, Australia
Data date: 30 June 2014
Date of evaluation: November 2016
Quantification method: Thermodynamic Simulation
Estimate type (deterministic/probabilistic): Deterministic scenarios

Project Summary

Habanero is an Enhanced Geothermal System (EGS) resource located in hot granite near the town of Innamincka in northeast South Australia. The Potential Geothermal Energy Source was first identified by a petroleum exploration well which encountered hot granite at a depth of 3,748 m. Analysis of regional gravity data showed that the granite batholith extends over approximately 1,000 km^2. Geodynamics Limited acquired geothermal exploration licences covering 991 km^2 of the gravity anomaly and these have subsequently been converted into geothermal retention licences. The company has drilled four full-sized geothermal wells into the granite at Habanero, 10 km south of Innamincka. Two further full-sized exploration wells have also been drilled into the granite at Jolokia, 10 km west of Habanero, and at Savina, 10 km southwest of Jolokia. All six of these deep wells have shown signs of having encountered pre-existing faults within the granite.

The four wells at Habanero have all shown various indications of fracturing or faulting within the granite. However, the vast majority of fluid flow, either into or out of the granite, occurs over a short section of intense fracturing now known as the Habanero Fault. This structure has been penetrated by all four Habanero wells and is interpreted to be a thrust fault, dipping at approximately 10° to the west-southwest.

Stimulations of the Habanero Fault have been conducted on three wells (Habanero 1, 3 and 4), injecting large volumes of water under pressure to induce shearing of the fault. After the latest stimulation of Habanero 4, the cloud of micro-seismic events, which is believed to indicate the extent of stimulation of the fault, extends over 4 km^2 (Figure 1).

Two closed-loop production and injection tests have been conducted at Habanero; the first between Habanero 1 and Habanero 3, and the second between Habanero 1 and Habanero 4. In both cases, the circulation rate has been restricted by the poor injectivity of Habanero 1, which was badly damaged by mud losses into the fault during drilling. Even so, the Habanero 1 – 4 closed-loop test achieved a circulation rate of 19 kg/s and a production temperature of 215°C, with both rate and temperature still increasing steadily when the test ended.

Figure 1
Induced Micro-Seismicity at Habanero *

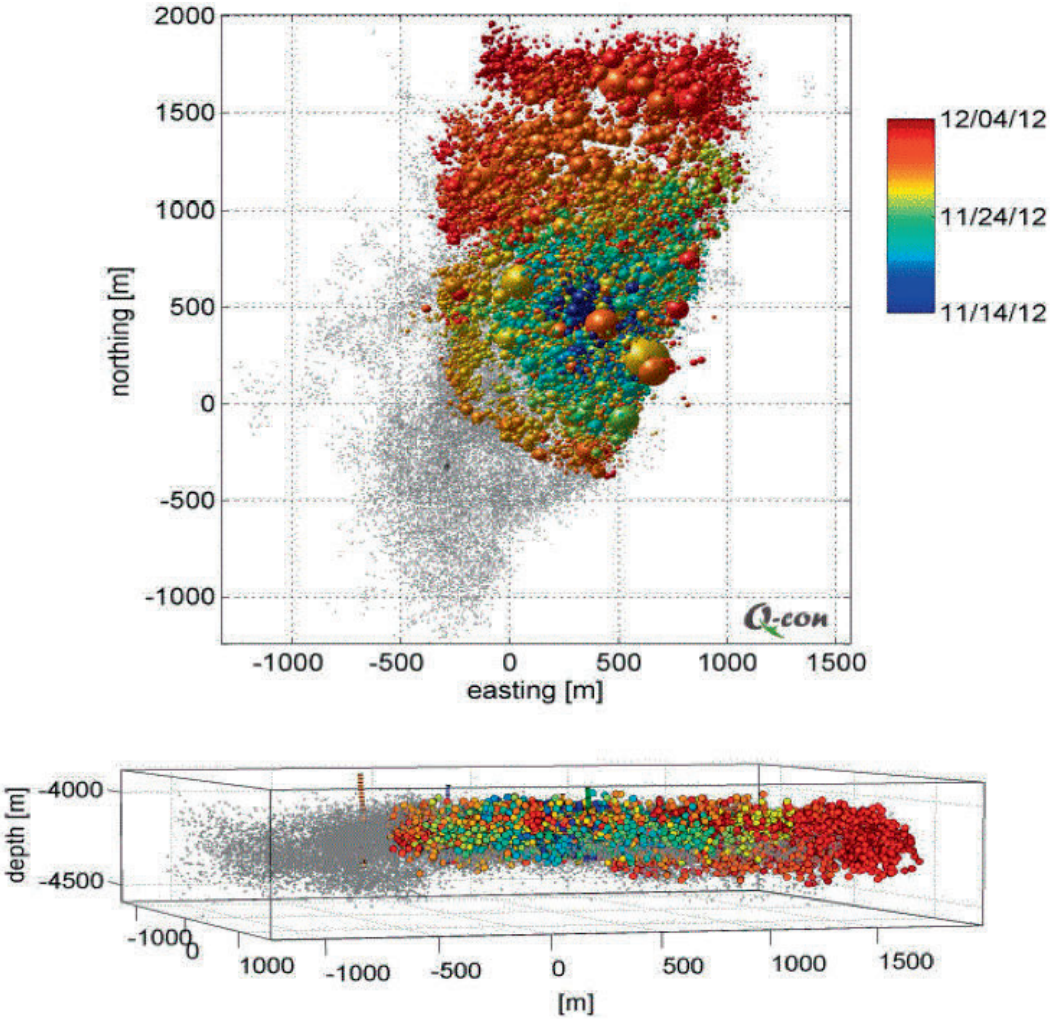

* Top - Plan view of hypocentre locations of seismicity from stimulation in Habanero 4. Each event is displayed by a globe, scaled to the event magnitude. Colour coding denotes occurrence time according to legend. Previous seismic activity is indicated by grey dots.
Bottom-Hypocentre locations in side-view looking from ESE. Events are displayed as dots with colour coding denoting the occurrence time.

Despite the seismicity induced during stimulation, both closed-loop tests have exhibited little or no seismicity during closed-loop operations. Tracer tests were conducted during both closed-loop tests and these results were used to calibrate a thermodynamic simulation model for field development planning. Stibnite scaling of the heat exchangers has been encountered, but this has been managed by periodic flushing of the equipment with a hot caustic soda solution. Corrosion tests were undertaken as part of the Habanero 1 – 4 closed-loop and have been used to select suitable materials for the wells and surface equipment.

Habanero Project

In light of the technical success of the Habanero 1 – 4 closed-loop test, Geodynamics has investigated the feasibility of a small-scale EGS project supplying heat to a local consumer near Innamincka. The only potential customers currently in the region are gas producers who require significant amounts of heat for gas processing.

A six-well geothermal project, comprising three injectors and three producers drilled at 1,200 m spacing, has been studied in depth and a draft Field Development Plan has been

prepared. Based upon injectivity and productivity tests done on the undamaged wells at Habanero, it is expected that each well will be able to inject or produce between 25 and 45 kg/s of brine with acceptable pump differentials of less than 100 bar. Thermodynamic simulation of Habanero has shown that, even with wells spaced at 1,200 m, production temperatures will decline by about 30°C over the planned 15-year project life. Even so, the average production temperature is expected to be around 214°C. The re-injection temperature has been set at 80°C to avoid any silica scaling.

Quantification

The resource estimate has been prepared using a scenario-based approach linked to outputs from the thermodynamic model. Three scenarios have been considered based upon production and injection rates of 25, 35 and 45 kg/s with capacity factors of 94%, 96% and 98%, respectively. The three scenarios are considered to represent low, best and high estimates of the Geothermal Energy Resources recoverable with the six-well development project.

Geothermal Energy Product

Heat for use in gas processing.

Reference Point

It is assumed that there is negligible heat loss between the production wellheads and the consumer, so the Reference Point is the inlet to the consumer's gas plant.

Geothermal Energy Resources

Geothermal Energy Resources:

- Low estimate: 19 PJ_{th} (610 MW.yr)
- Best Estimate: 28 PJ_{th} (880 MW.yr)
- High Estimate: 36 PJ_{th} (1,150 MW.yr)

UNFC-2009 classification

E category

There has been an active exploration for gas in the sediments above and around Habanero. There is increasing gas demand from several new LNG plants, so a successful exploration program could lead to the construction of a new plant to treat this gas. Such a gas plant is likely to require heat to process the gas. Geodynamics has successfully drilled six full-sized, deep geothermal wells and constructed and operated a pilot power station, demonstrating their ability to manage construction risks, environmental impacts and societal issues. However, it is currently considered that there are not reasonable prospects for economic extraction and sale of heat within the foreseeable future. Consequently, the project is categorized as E3.3.

F category

A Field Development Plan has been prepared for Habanero and all the necessary technology for this development already exists. However, the plan does propose that the last 100 metres of each well should be drilled with coil tubing. Coil tubing drilling is not new, but doing this in granite at such depths, temperatures and pressures have not been tried before. Therefore, these geothermal energy resources should be categorized as F2 until the coil tubing drilling has been demonstrated.

Recently Geodynamics has abandoned all the Habanero wells and signalled its intention to withdraw from the geothermal energy business. Since there are no current plans to develop or acquire additional data at this time, the project is considered to be in sub-category F2.3.

G category

Four wells have been drilled at Habanero, all of which have encountered the Habanero Fault. The fault has been successfully stimulated from three wells and two closed-loop production and injection tests have been conducted. Therefore the Habanero geothermal energy source can be considered "known" and all Geothermal Energy Resources should be reported in categories G1, G2 and G3.

UNFC-2009 Geothermal Energy Resources*

Classification	*Energy Quantity*	*Supplemental information*
E3.3; F2.3; G1	19 PJ_{th} (610 MW.yr)	Low estimate of Geothermal Energy Resources
E3.3; F2.3; G2	9 PJ_{th} (270 MW.yr)	Increment between Best and Low estimates
E3.3; F2.3; G3	8 PJ_{th} (270 MW.yr)	Increment between High and Best estimates.

* Energy Quantities are subject to rounding.

References

Geodynamics Limited, 2014; "Habanero Geothermal Project Field Development Plan". Web site, www.geodynamics.com.au.

Hogarth, R. & Bour, D., 2015; "Flow Performance of the Habanero EGS Closed Loop". Proceedings, World Geothermal Congress 2015.

McMahon, A. & Baisch, S., 2015; "Seismicity Associated with the Stimulation of the Enhanced Geothermal System at Habanero, Australia". Proceedings, World Geothermal Congress 2015.

Case Study 3: Insheim

Project Location: Insheim, Germany
Data date: 2015
Date of evaluation: January 2016
Quantification method: Extrapolation of production history
Estimate type (deterministic/probabilistic): Deterministic scenarios

Project Summary

The Insheim Geothermal Project is located on the western rim of the Upper Rhine Valley in Germany. At the time of reporting, the plant is one of four actually producing geothermal power plants in the Upper Rhine Valley.

Insheim stemmed from an understanding built at the European Enhanced Geothermal Systems (EGS) research project at Soultz-sous-Forêts (France; Garnish *et al.*, 1994; Baria *et al.*, 1995) of the geomechanical behaviour of large deep natural faults. This project exploits naturally permeable faults with the relatively little requirement for hydraulic stimulation. There are one production well and one injection well to depths of about 3,800 metres. Subsurface fluid flow takes place through north–south striking normal faults in the Buntsandstein formation and granitic basement rock. It is a closed loop system that does not require makeup water and does not discharge any harmful products into the atmosphere.

Geological information at Insheim was obtained predominantly from several boreholes and seismic reflection surveys carried out by the oil industry in the past and additional general geological knowledge.

During the build-up and testing phase of the development, it became clear that the injection well was not sufficiently permeable. Hydraulic stimulation improved the situation, but not enough. As a consequence, a sidetrack starting at 2,500 m depth was drilled from the injection well and injection now divides along both completions. This greatly improved the injectivity and circulation rates up to 85 L/s are now sustainable with acceptable pump loads.

The Insheim project has been generating power continuously since 2012. The business plan called for a gradual increase in flow rate from 65 L/s in the first year to 75 L/s in the second year and 85 L/s from the third year onwards (Baumgartner *et al.*, 2013). However, regulatory approvals currently restrict circulation rates to 65 L/s as a precaution against induced seismicity. There is a reasonable expectation that the limit could be raised to the planned 85 L/s in the future. The plant is designed and built to sustain 85 L/s.

In the Insheim area, there was some public concern about acceptance of induced seismicity and the potential for radioactive scaling material. The seismicity aspect was addressed by the installation of a permanent seismic monitoring system and the establishment of acceptance and reaction scheme mutually agreed by all parties concerned. As a part of this condition, the circulation flow-rate is restricted to ~65 L/s. Regarding the potential for scaling from radioactive material, techniques are used to reduce scaling by keeping any radioactive material in solution by the use of inhibitors, controlling circulation pressures and pH. Any potential radioactive substances will be handled according to appropriate regulations.

Construction of a district heating system that makes use of the rejected heat from the power plant is in the planning phase at the time of reporting. A heat exchanger is in place on the power plant but a distribution system is yet to be constructed.

Insheim project

The Insheim binary geothermal power plant has operated continuously since 2012 and has approximately 26 years of production left of its nominal 30-year design life. Insheim has one production and one injection well, both about 3,800 m deep. The wellhead temperature is about 165°C. The working fluid is isopentane. A line-shaft pump is used for production. The nominal installed capacity of the binary generator power of the plant is 4.8 MW_e and it has operated an average of 8,000 h/yr over the past four years. Internal operating power (that is, parasitic load) is supplied from external mains, with gross electrical output available for sale under Germany's feed-in tariff laws.

At the time of reporting, regulatory requirements limit circulation rate to 65 L/s as a precaution against induced seismicity. Before this restriction was imposed, the system demonstrated sustainable flow rates of 85 L/s. There is a reasonable expectation that the regulatory limit will be increased to 85 L/s at some time in the future.

Numerical modelling has provided confidence that circulation of fluid between the injection and production wells is via a deep and hot circuit along the sub-vertical normal fault, and that no appreciable temperature decline is expected over the remaining 26 years of the project lifetime. Similarly, no appreciable decrease in flow rate is expected from the current 65 L/s, but there is a downside risk that the maximum 85 L/s flow might decrease over time.

At the time of reporting, a distribution system is in the planning phase to sell heat from the power plant's rejected fluid into a local district heating market of 600–800 households to service seasonal demand. A study of the feasibility of a district heating system has shown it to be financially attractive (Heck *et al.*, 2009). The heat exchangers are already installed. The system will represent a cascaded use of the Geothermal Energy Resource, taking the geothermal fluid rejected from the power plant and reducing its temperature further without reducing the electrical power output. An average of 31% of the 76,500 $MW.hr_{th}$ of heat annually rejected by the plant (operating at its capacity of 85 L/s) is forecast to be utilized by the district heating system (Heck *et al.*, 2009). The total annual heat demand is forecast to be 23,700 $MW.hr_{th}$. However, demand is concentrated in winter, when peak demand could reach 96% of the maximum geothermal heating power. At the lower 65 L/s flow rate, up to 41% of available heat could be utilized.

Relevant project parameters are as follows:

- Wellhead temperature: 165°C
- Rejection temperature from power plant: 70°C
- Maximum flow rate: 85 L/s
- Current regulated flow rate: 65 L/s
- Maximum thermal power supplied to the power plant: 34 MW_{th}
- Current regulated thermal power supplied to the power plant: 26 MW_{th}
- Maximum electrical power at reference point: 4.8 MW_e
- Current regulated electrical power at reference point: 3.7 MW_e
- Average yearly production hours for electricity 2012–2015: 8,000 hr
- Input temperature for district heating: 70°C
- Rejection temperature from district heating: 45°C
- Input flow for district heating: 65 L/s
- Expected utilization factor: 41%
- Remaining project lifetime: 26 years.

Quantification

Electricity

This potential additional recoverable energy is calculated and classified separately. There is uncertainty about whether 85 L/s can be sustained over the plant lifetime. Calculations assume a possible 10% reduction in maximum flow rate as a low-side estimate.

All assumptions are summarized below:

- Power plant inlet / outlet temperature: 165°C / 70°C
- Operating hours (low / medium / high): hours per year 7,600 / 8,000 / 8,400
- Assumed conversion efficiency heat-to-electricity: 14.2%

Remaining lifetime is 26 years. The Insheim plant is rated to 4.8 MW_e maximum gross output. Power to run the plant equipment, and particularly the line-shaft pump, is sourced from the grid, so all the gross power from the plant is exported. The maximum gross output is based on a flow rate of 85 L/s. Production is currently limited by regulation to 65 L/s. There is a reasonable expectation that the regulation will be lifted to 85 L/s at some time in the future.

Quantification of electrical energy for the remaining project life is based on extrapolation of observed generation history over the first four years of operation. The mean expectation is that production will continue at 65 L/s and an average of 8,000 hours per year (91% availability) for the remainder of the project. There is a downside risk that plant availability will drop over time for operational reasons, resulting in declining output. The low side estimate is based on an average reduction to 87% availability (7,600 hours per year) from the historical average case over the remaining plant life. There is upside potential to increase the average availability of the plant over time as the plant management becomes more efficient. The upside potential is based on achieving 96% availability (8,400 hours per year).

There is a reasonable expectation that regulations will be amended in the foreseeable future to allow production rate to increase to 85 L/s for the remainder of the project, with all other parameters:

- Flow rate: 65 L/s
- Possible future flow rates (low / medium / high): 76.5 / 85 / 85 L/s.

Heat

Quantification of recoverable heat is based on modelled heat demand for the district heating system. The demand is expected to average 23,700 $MW.hr_{th}$ per year (Heck *et al.*, 2009). Upside and downside estimates are based on ±10% uncertainty in the expected mean.

- Heating system inlet / outlet temperature: 70°C / 45°C
- Annual heat demand (low / medium / high): 21,300 / 23,700 / 26,100 $MW.hr_{th}$
- Remaining lifetime: 26 years.

Product type

There are two Energy Products: electricity and heat.

Reference Point

The reference point for electricity is the station switchyard, where gross power is exported into the national grid. Internal power requirements are purchased from the grid.

The reference point for heat is the metering point for the heat distribution system.

Geothermal Energy Resources

Electricity

Electricity:

- Low estimate: 2.63 PJ_e (3.7 MW_e x 7,600 hrs x 26 years)
- Best estimate: 2.77 PJ_e (3.7 MW_e x 8,000 hrs x 26 years)
- High estimate 2.91 PJ_e (3.7 MW_e x 8,400 hrs x 26 years)

Possible Additional Electricity for 85 L/s flow

Possible Additional Electricity for 85 L/s flow:

- Low estimate: 0.43 PJ_e (0.6 MW_e x 7,600 hrs x 26 years)
- Best estimate: 0.82 PJ_e (1.1 MW_e x 8,000 hrs x 26 years)
- High estimate 0.86 PJ_e (1.1 MW_e x 8,400 hrs x 26 years)

Heat

Heat:

- Low estimate: 1.99 PJ_{th} (21,300 $MW.hr_{th}$ x 26 yrs)
- Best estimate: 2.22 PJ_{th} (23,700 $MW.hr_{th}$ x 26 yrs)
- High estimate: 2.44 PJ_{th} (26,100 $MW.hr_{th}$ x 26 yrs)

UNFC-2009 classification

Classification	*Energy Quantity*	*Supplemental information*
UNFC-2009 Class	**Commodity: Electricity**	The Insheim plant has generated electricity continuously since 2012. Expected remaining lifetime: 26 years.
E1.1; F1.1; G1	2.63 PJ_e	Conservative estimate based on 5% reduction in availability.
E1.1; F1.1; G2	0.14 PJ_e	Incremental energy based on continued output at current rates and availability for the remaining project life.
E1.1; F1.1; G3	0.14 PJ_e	Incremental energy based on 5% increase in availability.

E category classification and subclassification

Category	*UNFC-2009 definition*	*Reasoning for classification*
E1	Extraction and sale is economic on the basis of current market conditions and realistic assumptions of future market conditions.	Plant is commercially producing now through a market-wide German feed-in tariff scheme guaranteed for the life of the plant.
Sub-category	*UNFC-2009 definition*	
E1.1	Extraction and sale is economic on the basis of current market conditions and realistic assumptions of future market conditions.	

F category classification and subclassification

Category	*UNFC-2009 definition*	*Reasoning for classification*
F1	Feasibility of extraction by a defined development project or mining operation has been confirmed.	Energy is being successfully extracted and converted to electricity at the required commercial rate.
Sub-category	*UNFC-2009 definition*	
F1.1	Extraction is currently taking place.	

G category classification and subclassification

Category	*UNFC-2009 definition*	*Reasoning for classification*
G1	Quantities associated with a known deposit that can be estimated with a high level of confidence.	Two wells have been drilled at Insheim. The injection well has been stimulated. Production and injection tests have been conducted. The system is currently producing. Thus, the Insheim Geothermal Energy Source can be considered "known" and all resources are classified as G1, G2 and G3. While modelling has given a high level of confidence that temperature and flow will be sustained over the life of the plant, there is uncertainty in the availability of the plant. It may decrease due to greater than expected maintenance requirements, or increase due to achieved efficiencies.
G2	Quantities associated with a known deposit that can be estimated with a moderate level of confidence.	
G3	Quantities associated with a known deposit that can be estimated with a low level of confidence.	

Classification	*Energy Quantity*	*Supplemental information*
UNFC-2009 Class	**Commodity: Electricity**	The Insheim plant could generate additional electricity if Regulators allow flow rate to increase to 85 L/s.
E2; F1.3; G1	0.43 PJ_e	Conservative estimate based on 5% reduction in availability and 10% reduction in flow.
E2; F1.3; G2	0.39 PJ_e	Incremental energy based on continued output at current rates and availability for the remaining project life.
E2; F1.3; G3	0.04 PJ_e	Incremental energy based on 5% increase in availability.

E category classification and subclassification

Category	*UNFC-2009 definition*	*Reasoning for classification*
E2	Extraction and sale is expected to become economically viable in the foreseeable future.	There is a reasonable likelihood that Regulators will raise the 65 L/s flow limit to 85 L/s in the foreseeable future.

F category classification and subclassification

Category	*UNFC-2009 definition*	*Reasoning for classification*
F1	Feasibility of extraction by a defined development project or mining operation has been confirmed	The plant has been designed to accommodate 85 L/s flow. The extra energy can be recovered and converted using the existing plant.
Sub-category	*UNFC-2009 definition*	
F1.3	Sufficiently detailed studies have been completed to demonstrate the feasibility of extraction by implementing a defined development project or mining operation.	

G category classification and subclassification

Category	*UNFC-2009 definition*	*Reasoning for classification*
G1	Quantities associated with a known deposit that can be estimated with a high level of confidence.	Two wells have been drilled at Insheim. The injection well has been stimulated. Production and injection tests have been conducted. The system is currently producing. Thus, the Insheim Geothermal Energy Source can be considered "known" and all resources are classified as G1, G2 and G3. While modelling has given a high level of confidence that temperature will be sustained over the life of the plant, maximum flow might decrease by as much as 10% from 85 L/s. There is also uncertainty in the availability of the plant. It may decrease due to greater than expected maintenance requirements, or increase due to achieved efficiencies.
G2	Quantities associated with a known deposit that can be estimated with a moderate level of confidence.	
G3	Quantities associated with a known deposit that can be estimated with a low level of confidence.	

Classification	*Energy Quantity*	*Supplemental information*
UNFC-2009 Class	**Commodity: Heat**	The construction of a district heating network in Insheim is currently in the planning phase. A heat exchanger is already in place, with work proceeding on a distribution network to supply approximately 600 to 800 households.
E1.1; F1.3; G1	1.99 PJ_{th}	Conservative estimate based on heat demand 10% lower than predicted over the 26 year project life.
E1.1; F1.3; G2	0.23 PJ_{th}	Incremental energy based on predicted demand for 26 year project life.
E1.1; F1.3; G3	0.22 PJ_{th}	Incremental energy based on heat demand 10% higher than predicted over the 26 year project life.

E category classification and subclassification

Category	*UNFC-2009 definition*	*Reasoning for classification*
E1	Extraction and sale is economic on the basis of current market conditions and realistic assumptions of future market conditions. There are reasonable expectations that all approvals/contracts will be obtained within a reasonable timeframe.	The local market for heat is well understood and provides a firm commercial basis for developing the district heating system. There are reasonable expectations that all approvals/contracts will be obtained within a reasonable timeframe.
Sub-category	*UNFC-2009 definition*	
E1.1	Extraction and sale is economic on the basis of current market conditions and realistic assumptions of future market conditions.	

F category classification and subclassification

Category	*UNFC-2009 definition*	*Reasoning for classification*
F1	Feasibility of extraction by a defined development project has been confirmed.	A district heating network at Insheim is currently in the planning phase. The technology has already been demonstrated at analogous projects within the Rhine Graben.
Sub-category	*UNFC-2009 definition*	
F1.3	Sufficiently detailed studies have been completed to demonstrate the feasibility of extraction by implementing a defined development project.	

G category classification and subclassification

Category	*UNFC-2009 definition*	*Reasoning for classification*
G1	Quantities associated with a known deposit that can be estimated with a high level of confidence.	The power plant at Insheim is currently rejects sufficient heat to meet the heating demand of Insheim. An increase in flow to 85 L/s would provide even more surplus heat. Uncertainty relates to the predicted demand.
G2	Quantities associated with a known deposit that can be estimated with a moderate level of confidence.	
G3	Quantities associated with a known deposit that can be estimated with a low level of confidence.	

References

Garnish, J., Baria, R., Baumgärtner, J., Gérard, A., (1994). The European Hot Dry Rock Programme 1994-1995, *GRC Trans*.

Baria R, Garnish J, Baumgartner J, Gerard A, Jung R, (1995). Recent development in the European HDR research programme at Soultz-Sous-Foret (France). Proceeding of the World Geothermal Congress, Florence, Italy, International Geothermal Association, Vol. 4, 2631-2637, ISBN 0-473-03123-X.

Baumgärtner, J., Teza, D. and Wahl, G. (2013). Gewinnung geothermischer Energie durch Entwicklung und Zirkulation eines Störungssystems im Kristallin und deren mikroseismische Überwachung am Beispiel des Geothermieprojektes Insheim (Extraction of geothermal energy through the development and circulation of controlled systems in the crystalline basement and their microseismic monitoring, using the example of the geothermal project Insheim). Final report to Bestec GmbH. Accessed online 4 Feb 2016: http://edok01.tib.uni-hannover.de/edoks/e01fb14/777426781.pdf .

Baumgärtner, J. and Lerch, C. (2013): Geothermal 2.0: The Insheim Geothermal Power Plant. The second generation of geothermal power plants in the Upper Rhine Graben. Third European Geothermal Review. Geothermal Energy for Power Production. June 24-26, 2013, Mainz, Germany.

Baumgärtner, J., Hettkamp, T., Teza, D., Kölbel, T., Mergner, H., Schlagermann, P. and Lerch, C. (2013): Betriebserfahrungen mit den Geothermiekraftwerken Landau, Insheim und Bruchsal. bbr Fachmagazin für Brunnen- und Leitungsbau.

Gérard, A., Baumgärtner, J., Baria, R., 1997. An attempt towards a conceptual model derived from 1993-1996 hydraulic operations at Soultz. In: *Proceedings of NEDO International Geothermal Symposium*, Sendai, 2, pp. 329-341.

Heck, P., Anton, T., Oßwald, D., Müller, J. and Speicher, M. (2009). Entwicklung der Gemeinden Insheim und Rohrbach zu „Geowärmedörfern" (Development of Local Insheim and Rohrbach to "Geothermal Energy villages"). Institute for Applied Material Flow Management Research Report. Accessed online 4 Feb 2016: 00ea http://www.wald-rlp.de/index.php?eID=tx_nawsecuredl&u=0&g=0&t=1454652674&hash=bed002693004cf203761dfc53e7679858a461768&file=fileadmin/website/fawfseiten/projekte/downloads/Insheim.pdf

Weblink: http://www.geothermie-insheim.de

Case Study 4: Rotliegend-3 Geothermal Project

Project Location: the Netherlands
Data date: 2010
Date of evaluation: May 2015
Quantification method: Stochastic calculation based on uncertainty of reservoir parameters and a standard doublet/duplex configuration
Estimate type (deterministic/probabilistic): Probabilistic

Project summary

The Rotliegend-3 geothermal exploration project was started up in 2010. The project is aiming to provide the heat base load to greenhouses to replace a significant heat input from gas fired heat and power systems. Based on the regional geothermal potential mapping [2] this area was chosen for further evaluation. The latter evaluation comprised a detailed subsurface evaluation of a selected subset of the Dutch public subsurface dataset. This data set comprised five offset wells, a 3D-seismic dataset and a 2D seismic dataset.

Based on an anticipated fit for purpose well configuration and pressure difference over the production and injection intervals an indicative geothermal power estimate (MW) in terms of P90, P50 and P10 were calculated using DoubletCalc [1]. In the Netherlands, the default production licence period is 35 years. The anticipated load hours of the doublet are 7000 hours a year. Preliminary calculations suggest that after 55 years thermal breakthrough will result in uneconomic performance and there is reasonable confidence that the production licence will be extended to meet the technical lifetime of the system

At the status date of this evaluation, the exploration licence was in place, there was a high degree of confidence that all licences for drilling the exploration well would be in place in the foreseeable future and that if successful the production licence would be granted. Financial close awaits the granting the feed-in tariff [3] grant and the guarantee fund grant [4].

Quantification

The quantification estimate is derived from a standardized indicative geothermal power calculation using the software program DoubletCalc which is a prerequisite for entering government financial support schemes. This is a stochastic assessment based on the uncertainty of the geologic parameters: gross thickness, net to gross, permeability, depth and salinity of the formation waters (Figure 1). Technical and installation design and operational parameters refer to standard practices in the Netherlands.

Figure 1

Input for indicative Geothermal power calculation for the project

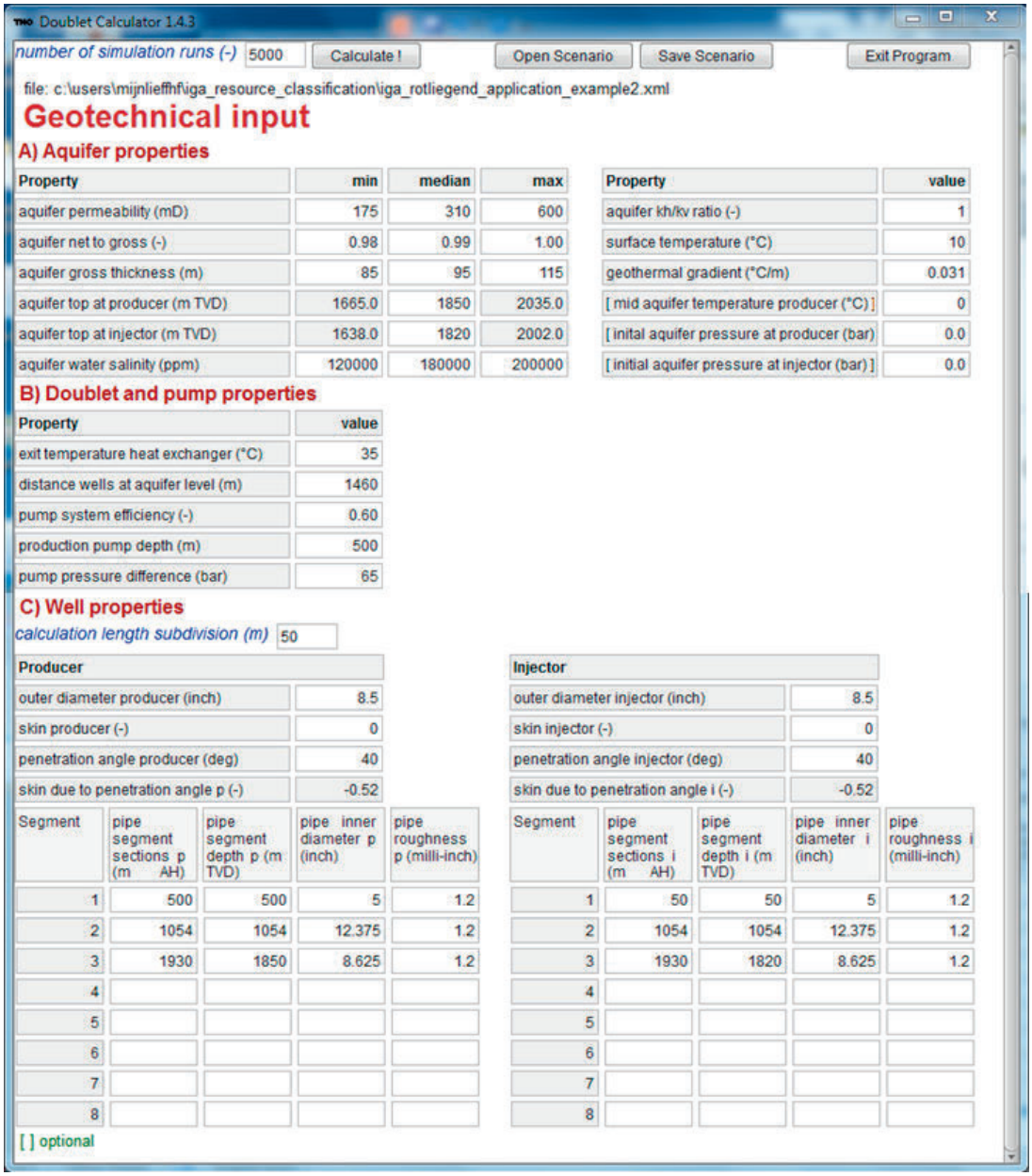

Doublet Calculator 1.4.3

number of simulation runs (-) 5000 | Calculate ! | Open Scenario | Save Scenario | Exit Program

file: c:\users\mijnlieffhf\iga_resource_classification\iga_rotliegend_application_example2.xml

Geotechnical input

A) Aquifer properties

Property	min	median	max
aquifer permeability (mD)	175	310	600
aquifer net to gross (-)	0.98	0.99	1.00
aquifer gross thickness (m)	85	95	115
aquifer top at producer (m TVD)	1665.0	1850	2035.0
aquifer top at injector (m TVD)	1638.0	1820	2002.0
aquifer water salinity (ppm)	120000	180000	200000

Property	value
aquifer kh/kv ratio (-)	1
surface temperature (°C)	10
geothermal gradient (°C/m)	0.031
[mid aquifer temperature producer (°C)]	0
[inital aquifer pressure at producer (bar)	0.0
[initial aquifer pressure at injector (bar)]	0.0

B) Doublet and pump properties

Property	value
exit temperature heat exchanger (°C)	35
distance wells at aquifer level (m)	1460
pump system efficiency (-)	0.60
production pump depth (m)	500
pump pressure difference (bar)	65

C) Well properties

calculation length subdivision (m) 50

Producer	
outer diameter producer (inch)	8.5
skin producer (-)	0
penetration angle producer (deg)	40
skin due to penetration angle p (-)	-0.52

Segment	pipe segment sections p (m AH)	pipe segment depth p (m TVD)	pipe inner diameter p (inch)	pipe roughness p (milli-inch)
1	500	500	5	1.2
2	1054	1054	12.375	1.2
3	1930	1850	8.625	1.2
4				
5				
6				
7				
8				

Injector	
outer diameter injector (inch)	8.5
skin injector (-)	0
penetration angle injector (deg)	40
skin due to penetration angle i (-)	-0.52

Segment	pipe segment sections i (m AH)	pipe segment depth i (m TVD)	pipe inner diameter i (inch)	pipe roughness i (milli-inch)
1	50	50	5	1.2
2	1054	1054	12.375	1.2
3	1930	1820	8.625	1.2
4				
5				
6				
7				
8				

[ ] optional

Figure 2
Probabilistic calculation results *

Doublet Calculator 1.4.3 Result Table

probabilistic plots | fingerprinting | export base case details

file: C:\Users\mijnlieffhf\IGA_resource_classification\iga_rotliegend_application_example2.xml

Geotechnics (Input)

Property	min	median	max
aquifer permeability (mD)	175.0	310.0	600.0
aquifer net to gross (-)	0.98	0.99	1.0
aquifer gross thickness (m)	85.0	95.0	115.0
aquifer top at producer (m TVD)	1665.0	1850.0	2035.0
aquifer top at injector (m TVD)	1638.0	1820.0	2002.0
aquifer water salinity (ppm)	120000.0	180000.0	200000.0

Property	value
number of simulation runs (-)	5000.0
aquifer kh/kv ratio (-)	1.0
surface temperature (°C)	10.0
geothermal gradient (°C/m)	0.031
[mid aquifer temperature producer (°C)]	0.0
inital aquifer pressure at producer (bar)]	0.0
[initial aquifer pressure at injector (bar)]	0.0
exit temperature heat exchanger (°C)	35.0
distance wells at aquifer level (m)	1460.0
pump system efficiency (-)	0.6
production pump depth (m)	500.0
pump pressure difference (bar)	65.0
outer diameter producer (inch)	8.5
skin producer (-)	0.0
skin due to penetration angle p (-)	-0.52
pipe segment sections p (m AH)	500.0,1054.0,1930.0
pipe segment depth p (m TVD)	500.0,1054.0,1850.0
pipe inner diameter p (inch)	5.0,12.38,8.62
pipe roughness p (milli-inch)	1.2,1.2,1.2
outer diameter injector (inch)	8.5
skin injector (-)	0.0
skin due to penetration angle i (-)	-0.52
pipe segment sections i (m AH)	50.0,1054.0,1930.0
pipe segment depth i (m TVD)	50.0,1054.0,1820.0
pipe inner diameter i (inch)	5.0,12.38,8.62
pipe roughness i (milli-inch)	1.2,1.2,1.2

Geotechnics (Output)

Monte Carlo cases (stochastic inputs)	P90	P50	P10
aquifer kH net (Dm)	22.26	30.17	45.26
mass flow (kg/s)	58.01	73.05	94.15
pump volume flow (m³/h)	188.0	237.6	306.5
required pump power (kW)	565.8	715.1	922.4
geothermal power (MW)	6.38	8.34	10.95
COP (kW/kW)	10.6	11.6	12.7
aquifer pressure at producer (bar)	181.0	192.75	204.76
aquifer pressure at injector (bar)	178.5	189.6	200.59
pressure difference at producer (bar)	18.88	21.9	23.67
pressure difference at injector (bar)	29.43	34.12	36.86
aquifer temperature at producer * (°C)	65.68	68.85	72.02
temperature at heat exchanger (°C)	64.79	67.9	70.99

base case (median value inputs)	value
aquifer kH net (Dm)	29.16
mass flow (kg/s)	70.65
pump volume flow (m³/h)	228.7
required pump power (kW)	688.1
geothermal power (MW)	7.97
COP (kW/kW)	11.6
aquifer pressure at producer (bar)	193.2
aquifer pressure at injector (bar)	189.96
pressure difference at producer (bar)	22.14
pressure difference at injector (bar)	34.61
aquifer temperature at producer * (°C)	68.82
temperature at heat exchanger (°C)	67.83
pressure at heat exchanger (bar)	24.73

* @ mid aquifer depth

* The economic assumptions are for heating greenhouses. Delivery of heat is secured because the operator of the project is the user of the delivered heat.

The product/commodity produced is heat.

Reference Point

The reference point is at "sweet side" or secondary loop of the heat exchanger where the heat produced is measured according to specifications detailed in the feed-in tariff documents. Internal power use has already been subtracted.

Geothermal Energy Resources

Geothermal Energy Resources:

- Low estimate (P90): 8.3 PJ_{th} (330 MW yr); 6 MW_{th} for 55 years, with 7,000 load hrs/yr
- Best Estimate (P50): 11.1 PJ_{th} (440 MW yr); 8 MW_{th} for 55 years, with 7,000 load hrs/yr
- High Estimate (P10): 15.2 PJ_{th} (605 MW yr); 11 MW_{th} for 55 years, with 7,000 load hrs/yr

UNFC-2009 classification

E category classification and subclassification

Category	*UNFC-2009 definition*	*Reasoning for classification*
E2	Extraction and sale is expected to become economically viable in the foreseeable future.	*Economy* Economic evaluation of the indicative geothermal power estimates proved the P90 geothermal power estimate to be economic. *Financing* Application of the government schemes "feed-in tariff" and "guarantee fund" have been submitted and are expected to be granted. Bank loans are in place under the condition of positive response on the government financial support schemes. Loans by the province are granted. *Licensing* The required exploration licence is in place. Technical evaluation of the drilling activity has yet to be audited by the mining authority. If the exploration well testing provides confidence in economic development granting of a production licence is regarded as certain. *Societal issues* No adverse activity from the general public stalling or terminating the granting of the necessary licences is foreseen as geothermal energy for heating greenhouses is regarded as environmentally friendly and the preferred option to transfer to green energy in heating greenhouses and operational safe by the public.
Sub-category	*UNFC-2009 definition*	
	Not applicable	

F category classification and subclassification

Category	*UNFC-2009 definition*	*Reasoning for classification*
F3	Feasibility of extraction by a defined development project or mining operation cannot be evaluated due to limited technical data.	*Geo-science studies* Detailed subsurface studies using appropriate well data and 2D& 3D seismic surveys were used to adequately assess the geothermal potential. The reports resulted in an assessment of the geothermal potential and are the basis for the well-design and drilling plan. Drilling plan report has been filed at the relevant authority. *Technical studies* Preliminary well design is reported. Preliminary surface installation design is reported as well. These reports were input for the economic assessment. All identified technical issues are anticipated to be solvable with standard industry practices.
Sub-category	*UNFC-2009 definition*	
F3.1	Where site-specific geological studies and exploration activities have identified the potential for an individual deposit with sufficient confidence to warrant drilling or testing that is designed to confirm the existence of that deposit in such form, quality and quantity that the feasibility of extraction can be evaluated.	

G category classification and subclassification

Category	*UNFC-2009 definition*	*Reasoning for classification*
G4	Estimated quantities associated with a potential deposit, based primarily on indirect evidence.	The Geothermal project is regarded as an exploration project because: No wells have been drilled in the exploration licence. The nearest off-set well is some 20 km away. This well gives appreciable confidence on the presence of the aquifer, but not on its deliverability, as the "correlation length" of the relevant reservoir properties is significant lower.
Sub-category	*UNFC-2009 definition*	
G4.1	Low estimate of the quantities;	
G4.2	Incremental amount to G4.1 such that *G4.1+G4.2* equates to a best estimate of the quantities;	
G4.3	Incremental amount to G4.1+G4.2 such that *G4.1+G4.2+G4.3* equates to a high estimate of the quantities.	

UNFC-2009 classification and quantification

Classification	*Energy Quantity*	*Supplemental information*
UNFC-2009 Class	Energy units used: Petajoules (PJ) = (x10^{15}J)	
E2; F3.1; G4.1	8.3 PJ	It is the P90 estimate.
E2; F3.1; G4.2	2.8 PJ	Increment between Best and Low estimates. The P50-P90 estimate (11.1-8.3PJ). As such the G4.2 is incremental to G4.1.
E2; F3.1; G4.3	4.2 PJ	Increment between High and Best estimates. The P10-P50 estimate (15.2-11.1PJ).

Disclaimer

The case study presented with facts and figures is loosely based on the Koekoekspolder project in the Netherlands. Data and information is available in the public domain through the RVO website[2].[5]

References

[1] DoubletCalc, http://nlog.nl/nl/geothermalEnergy/tools.html

[2] ThermoGis, www.thermoGis.nl

[3] Application documents Guarantee fund: www.RVO.nl

[4] Feed in Tariff information, www.rvo.nl/

[5] S. Henares, M. R. Bloemsma, M. E. Donselaar, H. F. Mijnlieff, A.E. Redjosentono, H. G. Veldkamp, G. J. Weltje. 2014, The role of detrital anhydrite in diagenesis of Aeolian sandstones (Upper Rotliegend, The Netherlands), Implications for reservoir-quality.

[2] http://www.rvo.nl/subsidies-regelingen/projecten/eerste-aardwarmtecluster-koekoekspolder

Case Study 5: Dutch Rotliegend Play Area – Nationwide

Project Location: the Netherlands, Dutch Rotliegend reservoir
Data date: 2014
Date of evaluation: May 2015
Quantification method: Stochastic calculation based on the uncertainty of reservoir parameters and a standard doublet/duplex configuration
Estimate type (deterministic/probabilistic): Probabilistic

Project summary

The Permian Rotliegendes is a well-known and prolific gas reservoir in the Netherlands. For gas E&P the Rotliegend reservoir has been drilled over a thousand times. The extent and quality of the aquifer/reservoir are relatively well known. In the last decade, especially Dutch greenhouse owners showed interest to convert to geothermal instead of heating their greenhouses with natural gas. The Rotliegend geothermal play area has been mapped using the public domain well and seismic data (van Wees et al. 2012, ThermoGIS). Figure 1 indicates the availability of data for the reservoir evaluation. Within the Rotliegend geothermal play area, several geothermal projects are realized and planned (Figure 1).

At present, just under seventy geothermal licences are in force (MEA 2015). Within three of these licences, the Rotliegend reservoir was drilled successfully resulting in four producing geothermal doublets. Some six of these seventy licences are still in the exploration phase targeting the Rotliegend. Eleven exploration licences targeting the Rotliegend were expired or withdrawn.

For all the exploration licences applied and granted, the Government of the Netherlands has one or more indicative power estimates of the proposed project to be executed in the licence. For the geothermal systems in the production phase, the Dutch government receives production data. The geothermal operator also has to file their production plan including the (future) production profile and/or installed power estimate plus the anticipated full load hours per year over the project lifetime. Production licences are in general granted for 35 years unless modelling shows that the cold waterfront passes beyond the licence boundary earlier. When operations proceed satisfactorily from an operational and HSE point of view, it is assumed there will be no obstructions for licence term extension.

The various defined projects can be classified according to UNFC-2009 and the indicative power estimates recalculated to energy produced within the project life.

Figure 1
Map of data for evaluation of the Rotliegend aquifer*

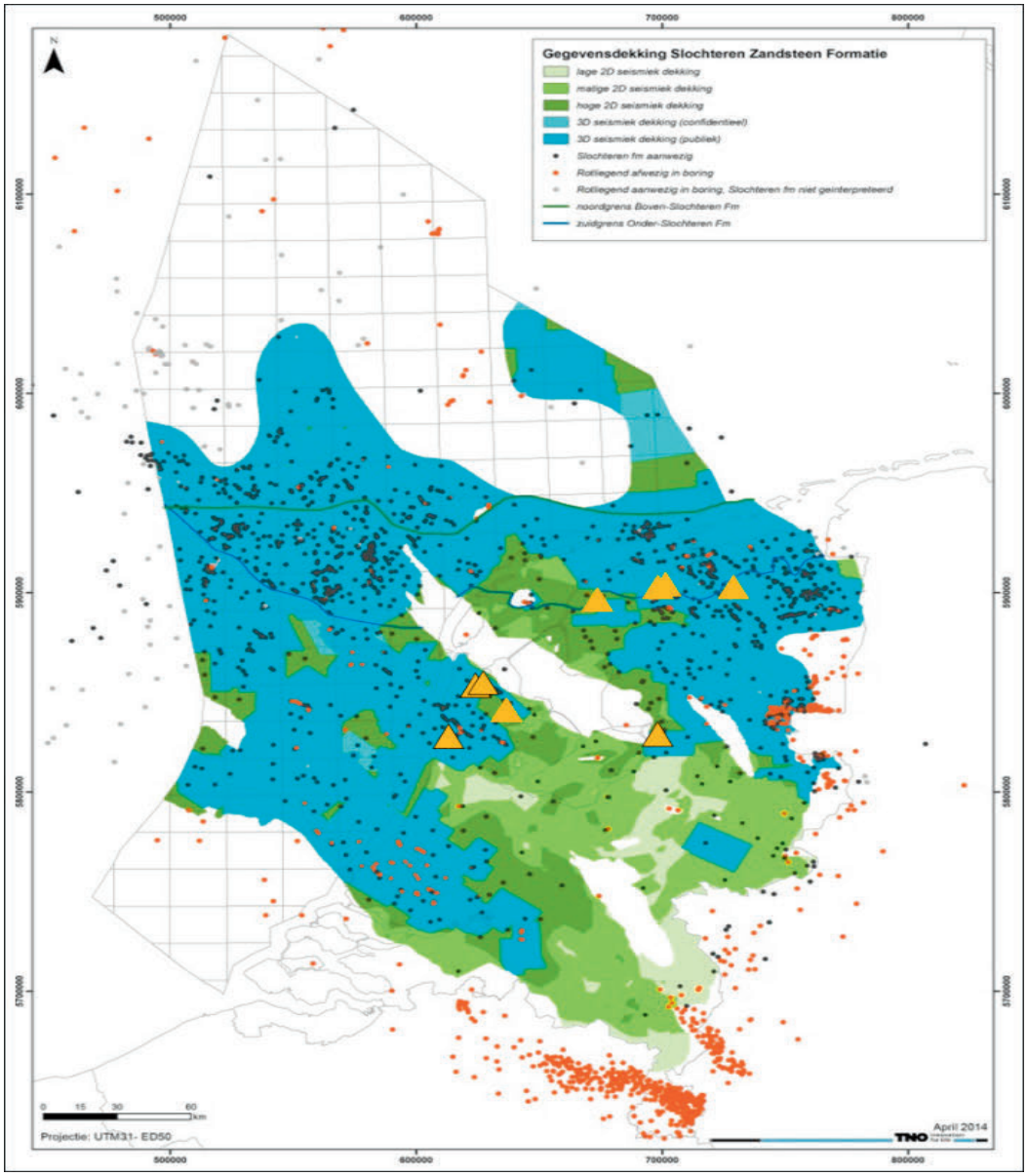

* Coloured areas give the outline of the presence of the Rotliegend aquifer. When the color is blue there is public 3D-seismic available, light blue 3D-seismic still confidential, darkish green high density 2d-seismic, light green low density (generally vintage) 2D-seismic lines. Black dots well which proved the presence of the Rotliegend aquifer, Red dots well which proved the absence of the Rotliegend aquifer (reason not disclosed: not deposited, faulted out, eroded). Green dots well which proved the presence of the Rotliegend strata but aquifer not encountered. The Orange triangles denote the location of the Rotliegend targeted doublets. With a black outline the realized / operational, no outline the doublets with advanced plans.

Geothermal resource classification of Rotliegend Geothermal projects

Production projects

Currently, four geothermal systems are producing from the Rotliegend aquifer. All systems are in the operational phase which means all licences to produce or for prolonged testing are in place and the chance of acquiring the official production licence is believed to be 100%. This corresponds to the E1 definition and supporting explanation "*Extraction and sale is economic on the basis of current market conditions and realistic assumptions of future market conditions. All necessary approvals/ contracts have been confirmed or there are reasonable expectations that all such approvals/contracts will be obtained within a reasonable timeframe. Economic viability is not affected by short-term adverse market conditions provided that longer-term forecasts remain positive.*"

Additionally, the E1.1 category definition emphasizes the current and future market conditions (*Extraction and sale is economic on the basis of current market conditions and realistic assumptions of future market conditions*) as opposed to E1.2 where the economy of the project is relying on (dedicated) governmental subsidies and / or other considerations (*Extraction and sale is not economic on the basis of current market conditions and realistic assumptions of future market conditions, but is made viable through government subsidies and/or other considerations.*).

In Section I.2. Treatment of Policy Support of the document Specifications of UNFC-2009 to geothermal energy resources it is recognized that:

- A variety of policy support mechanisms, regulatory instruments and financial incentives (e.g., feed-in tariffs, premiums, grants, tax credits etc.) exist worldwide to reflect the value that offtakers or the state place on renewable energy (or geothermal energy specifically);
- Some energy subsidies may be available on a project-by-project basis, while others may be available to all such renewable/geothermal energy projects in the market;
- Energy subsidies are typically phased out over time, or once the qualifying renewable energy sources reach a certain share of overall energy production.

The project economics of the producing projects under consideration are enhanced by the support of the Dutch Sustainable Energy Scheme (SDE+) which is a general feed-in tariff scheme for the development of sustainable energy projects. Although the scheme can be regarded to realize a level playing field for all energy carriers equalizing the effect of different supportive (tax/policy/environment protection costs evasive) measures for non sustainable energy carriers and thus maybe regarded as part of the market conditions leading to an E1.1 classification. However, the definition given in section I2 must be interpreted sensu stricto. Therefore the project is classified as E1.2 on the E-axis; "Extraction is currently taking place", thus the projects are classified as F1.1 on the F-axis.

Table 1
Listing of resource estimates per project based on installed power and load hour estimates. Class: E1.2; F1.1; G1, 2, 3

Project	*Power estimate (MW)*			*Load hours /yr estimate*			*Project lifetime (yr)*	*Energy estimate over project lifetime (PJ)*		
	Low	*Best*	*High*	*Low*	*Best*	*High*		*P90*	*P50*	*P10*
I	3	5	7	7 800	8 160	8 700	35	4	5	6
II	8	10	14	7 200	7 800	8 640	35	9	10	12
III	7	9	11	6 600	7 200	7 920	35	7	8	9
IV	7	9	10	7 800	8 160	8 640	35	7	8	9
Total	Stochastic sum of future energy production of the four projects							30	32	35

The UNFC-2009 classified resource estimates for the 'aggregated' producing geothermal systems are as follows:

UNFC-2009 class	*Confidence level*	*Resource estimate (PJ)*
E1.2; F1.1; G1	High confidence	30
E1.2; F1.1; G2	Medium confidence	2
E1.2; F1.1; G3	Low confidence	3

The currently operational geothermal systems (Table 1) have a longer operational lifetime than the given production licence period. Resources that are seen to be technically recoverable after the expiry date of the licence which is beyond the "foreseeable future" timeframe which is stated to be five years (section I.1, document Specifications of UNFC-2009 to geothermal energy resources) should (sensu stricto) be classified as E3 on the E-axis. However, studies have indicated that it is highly likely that from a technical point of view the production can commence beyond the present licence expiration and with respect to the longstanding policy of efficient end sustainable resource exploitation in the Netherlands licence extension is highly certain as well one may deviate from the strict five years period definition and regard foreseeable future as long as the technical life end of the projects. Therefore, sensu largo, an E2 classification would be more adequate also with reference to the E3.2 of the presently immature exploration projects described later in the application example study. The present evaluator prefers the E2 classification

Production is currently taking place, therefore the F1.1 classification can be assigned to this category as well.

	Power estimate (MW)			*Load hours /yr estimate*			*Project lifetime (yr)*	*Energy estimate over project lifetime (PJ)*		
	Low	*Best*	*High*	*Low*	*Best*	*High*		*P90*	*P50*	*P10*
I	3	5	7	7 800	8 160	8 700	10	1.2	1.5	1.8
II	8	10	14	7 200	7 800	8 640	20	5	6	7
III	7	9	11	6 600	7 200	7 920	15	3.1	3.5	4
IV	7	9	10	7 800	8 160	8 640	5	1.0	1.2	1.3
Total	Stochastic sum of future energy production of the four projects							11	12	13

The UNFC-2009 classified resource estimates for the 'aggregated' producing geothermal systems are as follows:

UNFC-2009 class	*Confidence level*	*Resource estimate (PJ)*
E2; F1.1; G1	High confidence	11
E2; F1.1; G2	Medium confidence	1
E2; F1.1; G3	Low confidence	1

Exploration projects

There are six exploration licences with relatively advanced site specific evaluations on the resource estimates. Therefore, these projects are classified as F3.1: '*where site-specific geological studies and exploration activities have identified the potential for an individual deposit with sufficient confidence to warrant drilling or testing that is designed to confirm the existence of that deposit in such form, quality and quantity that the feasibility of extraction can be evaluated*'.

Licences and grants have been secured classifying the projects as E2, '*Extraction and sale is expected to become economically viable in the foreseeable future*'. Most projects await final fine tuning of the subsurface work, risk evaluation and some definitive financial close decisions to drill the first exploratory well. The resource estimates per project are stochastically calculated from the power estimate range from the site specific evaluations and the yearly load hours estimate range. Subsequently, the resources estimates of these six exploration projects are stochastically added as well as these projects are operating independent of each other resulting in the aggregated resource estimate of this class.

	Power estimate (MW)			*Load hours /yr estimate*			*Project lifetime (yr)*	*Energy Estimate over project lifetime (PJ)*		
Project	*Low*	*Best*	*High*	*Low*	*Best*	*High*		*P90*	*P50*	*P10*
V	15	21	28	7 500	8 400	8 700	35	18	22	26
VI	6	8	10	7 500	8 400	8 700	40	8	9	10
VII	6	12	17	7 500	8 400	8 700	45	12	16	20
VIII	13	20	30	7 500	8 400	8 700	35	17	22	27
IX	7	13	28	7 500	8 400	8 700	50	16	23	34
X	10	15	29	7 500	8 400	8 700	45	18	23	32
Total	Stochastic sum of future energy production of the four projects							104	116	129

The UNFC-2009 classified resource estimates for the 'aggregated' producing geothermal systems are as follows:

UNFC-2009 class	*Confidence level*	*Resource estimate (PJ)*
E2; F3.1; G4.1	High confidence	104
E2; F3.1; G4.2	Medium confidence	12
E2; F3.1; G4.3	Low confidence	13

Rotliegend Play resource estimate

Play wise resource estimates have been performed using Rotliegend geothermal potential estimate of Kramer et al. 2012. They estimate a Heat In Place for the Rotliegend reservoir of 409,000 PJ. Potential Recoverable Heat estimate is in the order of 111,000 PJ. Defining notional projects and applying general economic and flow constraints to the Potential Recoverable Heat map results in a Recoverable Heat estimate of some 27,000 PJ.

Development of the notional projects is not envisaged in the foreseeable future, so an E3 classification applies. The general economic evaluation of the Recoverable Heat estimate leads to an E3.2 classification as the '*economic viability of extraction cannot be determined due to insufficient information*'. The Recoverable Heat figures are part of the Potential Recoverable Heat estimate. Therefore, the remainder of the Potential Recoverable Heat can be regarded as "not economic yet" and classified as E3.3.

The above resource figures of Kramer et al. 2012 all pertain to notional geothermal doublet exploration projects based on regional mapping of the Rotliegend reservoir (ThermoGis). Such notional projects classify as F3 on the F-axis ("*maturities of studies and commitments*"). The amount of data underlying the reservoir maps bears the character of local geological study and thus the classification can be more specifically classified as F3.2 "*where local geological studies and exploration activities indicate the potential for one or more deposits in a specific part of a geological province, but requires more data acquisition and/or evaluation in order to have sufficient confidence to warrant drilling or testing that is designed to confirm the existence of a deposit in such form, quality and quantity that the feasibility of extraction can be evaluated;*".

The estimates are regarded as best estimates of future notional exploration projects. UNFC-2009 states "Category G4, when used alone, shall reflect the best estimate and is equal to G4.1+G4.2". Table 2 shows the UNFC-2009 classification of the above mentioned resource estimates.

Table 2
UNFC-2009 classification of the Rotliegend Play resource estimate

Classification	*Estimate (PJ)*
E3.2; F3.2; G4 (G4.1+G4.2)	27 000
E3.3; F3.2; G4 (G4.1+G4.2)	84 000

Rotliegend Play resource estimate

For portfolio or national reporting purposes there, generally, is a wish for a single best estimate of the resource. The figures of the producing geothermal systems may be added under the condition that the different categories are mentioned (UNFC-2009 Part II section IV). For adding the resource estimates of exploration projects, the figures should be appropriately risked. For the Exploration projects (E2; F3.1; G4) the risk of not resulting in an economical viable project is regarded as low. A Possibility Of Discovery (POD) of 80% is deemed realistic. The POD of the Play based Recoverable Heat estimate (E3.2; F3.2; G4) is thought to be significantly lower. A hint is given by the relatively high number of exploration licences with Rotliegend as target reservoir, which expired or were withdrawn. The POD is estimated to be 50% for this resource class. The remaining Potential Recoverable Heat (E3.3; F3.2; G4) has a very low chance of discovery. A POD of 10% is thought to be realistic. Table 3 gives the result of the aggregation of the above described geothermal resources.

Table 3
The best estimate of the geothermal resource potential of the Dutch Rotliegend Play

UNFC-2009 class	*Resource estimate (PJ)*	*POD (%)*	*Risked resource estimate (PJ)*
E1.1; F1.1; G1+G2	32	-	32
E2; F1.1; G1+G2	12	-	12
E2; F3.1; G4 (G4.1+G4.2)	116	80	93
E3.2; F3.2; G4 (G4.1+G4.2)	27 000	50	13 500
E3.3; F3.2; G4 (G4.1+G4.2)	84 000	10	8 400
Total risked resources			22 037

Disclaimer

All figures presented are not the operator figures because they reside in the confidential domain. Figures given are rough estimates based on production data and regional geological data and average operational figures. The POD and thus the risked volumes are only a rough guess. These values should not be used for reporting as they are only given as an illustration of a portfolio or national resource reporting as described in UNFC-2009 Part II section IV, National resource reporting.

References

ThermoGis: http://www.thermogis.nl/thermogis_en.html

Kramers, L., van Wees, J.-D., Pluymaekers, M.P.D., Kronimus, A. & Boxem, T., 2012, Direct heat resource assessment and subsurface information systems for geothermal aquifers; the Dutch perspective. Netherlands Journal of Geosciences — Geologie en Mijnbouw , 91 – 4, pp 637 – 649.

UNFC-2009, United Nations Framework Classification for Fossil Energy and Mineral Reserves and Resources 2009. (UNFC-2009) http://www.unece.org/energy/se/unfc_2009.html

MEA 2015, NATURAL RESOURCES AND GEOTHERMAL ENERGY IN THE NETHERLANDS. 2014 Annual review. An overview of exploration, production and underground storage. (http://www.nlog.nl/resources/Jaarverslag2014/ENGLISH%20Natural%20Resources%202014%20final_v1.pdf)

van Wees J.-D., Kronimus A., van Putten M., Pluymaekers M.P.D., Mijnlieff H., van Hooff P., Obdam A. & Kramers L., 2012, Geothermal aquifer performance assessment for direct heat production – Methodology and application to Rotliegend aquifers. Netherlands Journal of Geosciences — Geologie en Mijnbouw. 91 – 4, 651 – 665.

Case Study 6: Hódmezővásárhely District Heating

Project Location: Hódmezővásárhely, Hungary
Data date: 2012
Date of evaluation: January 2016
Quantification method: Volumetric heat assessment
Estimate type: Probabilistic

Project summary

Hódmezővásárhely is a mid-size town with 47,668 inhabitants situated in the south-eastern part of the Pannonian Basin, Hungary, Central Europe. The geothermal potential of the Pannonian basin is outstanding in Europe, as it lies on a characteristic positive geothermal anomaly, with heat flow density ranging from 50 to 130 mW/m^2 with a mean value of 90-100 mW/m^2 and geothermal gradient of about 45°C/km (Dövényi and Horváth, 1988). This increased heat flux is related to the Early-Middle Miocene formation of the basin when the lithosphere stretched and thinned (thus the crust is "only" 22-26 km thick) and the hot asthenosphere got closer to the surface (Horváth and Royden, 1981).

During the thermal subsidence of the basin, a large depression formed, occupied by a huge lake (Lake Pannon), which was gradually filled up by sediments transported by rivers, originating in the surrounding uplifting Alpine and Carpathian mountain belts (Bérczi and Phillips, 1985; Magyar et al., 1999).

These several thousand metre thick multi-layered porous sediments (Upper Miocene-Pliocene "Pannonian" sequence") have low heat conductivity and are composed of successively clayey and sandy deposits. Within this basin-fill sequence the main thermal-water bearing sandy aquifers are found in a depth interval of ca. 800-2,000 m in the interior parts of the basin where the temperature ranges from 60 to 90°C. This regionally extended geothermal aquifer is widely used for direct heat purposes as well as for balneology on many parts of the Pannonian Basin, especially in its south-eastern part in Hungary, where Hódmezővásárhely is also situated.

In Hódmezővásárhely a Municipality owned company has operated a cascade system of 10 wells (8 production and 2 reinjection) for over 20 years (Ádok, 2012). The first well was drilled in 1954 for medical and district heating purposes. The wells are multi-purpose and supply water for district heating, domestic hot water supply and are also used for balneological purposes (Figure 1). Due to the chemical composition of the water, 3 wells qualify as medicinal water. The current system consists of two separate geothermal loops. The high temperature (80–90°C) thermal water is first directed to heat exchangers of the district heating plants. Than the cooled (ca. 50°C) outlet water is partly directed to the second loop, which is the pipeline of domestic hot water supply, partly reinjected (at a temperature of 35°C). Part of the water used for domestic hot water supply is also used for balneological purposes (mixed with cold water). The system provides heating of 2,725 flats and 130 public consumers, such as the town hall, hospitals, museums, schools, shopping centres, etc. It was developed in several stages (1967, 1984, 1994-1998, 2007), partly co-financed by the Energy and Environment Operative Program of the European Regional Development Fund, but mostly developed from the resources of the Municipality.

The outflow temperature of 6 production wells used for district-heating and domestic hot water supply ranges between 65–90°C, with the wells' depth ranging between 1800 and 2400 m on average. The wells tap aquifers with high hydraulic conductivity (1.15-5.8 x 10^{-5} m/s) and effective porosity (0.13-0.16) (Szanyi and Kovács, 2010), therefore they may yield thermal water up to 30 L/s. However, during use, the max. production rate is 20 L/s. (The other 2 production wells – technically also part of the cascade system – are used for domestic water supply and balneological purposes. These 2 wells tap shallower aquifers with lower temperatures and are not considered in this study).

The intensive use of the wells completed in the Upper Pannonian sandy aquifers in the 1970s and 1980s decreased the hydraulic heads continuously, which was the reason for initiating reinjection. The 2 reinjection wells were drilled in 1998 and 2007. However, only about 50% of the total amount of produced water for heating purposes is reinjected (Ádok, 2012). The injectivity degrades mainly due to the clogging of the pore-throats. Well maintenance using compression cleaning is needed every 2 years since the injected water is filtered using a microfiber filter system. The average reinjection temperature is 35°C which underpins a good thermal efficiency (compared to 80–90°C of production temperature). So far no detectable temperature decrease occurred in the aquifer at a 300 m distance from the injection well, because of the high heat capacity of the rock matrix (Szanyi and Kovács, 2010).

Figure 1
Distribution of uses in Hódmezővásárhely
Total annual production of the entire cascade system (2009): 1,605,407 m³

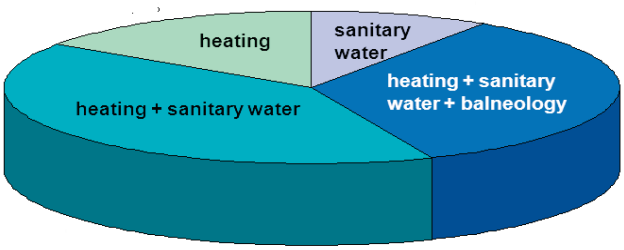

Since the expansion of the geothermal system (1993), the gas consumption of the heating centres dramatically dropped (from 4.6 million m³ to 0.5 million m³). In 2011 the share of geothermal in the total heating was about 86%, while the gas accounted for 14%.

The increasing use of geothermal has a very positive effect on air quality, an annual saving of 4.5 million m³ of gas is calculated, which is equivalent of 4,680 t CO_2 emission.

Quantification

There are two types of quantification methods presented (see more details under the UNFC-2009 classification section): a simple production forecast for the currently operating project and a volumetric method using Monte Carlo simulation to estimate the entire (future, still untapped) potential of the reservoir, on the basis of a conceptual or notional project.

The quantification of the resource estimate was done by applying the volumetric method using Monte Carlo simulation for the reservoir parameters (area, thickness, temperature, porosity) as well as recovery factor. Assumptions about the volume of the reservoir are based on well data and cumulative recharge areas of single wells deriving from hydrodynamic modelling. Temperature data refer to produced depths, calculated from outflow temperatures. The quantities associated with high-, medium- and low-level of

confidence are based on 90, 50 and 10 percentile of the resulting cumulative probability distribution respectively. For details see Appendix 1.

Product type

Heat (energy for heating).

Reference Point

The reference point is where fluid enters the heat exchanger. Due to the close distance between the wells and the plant and modern insulation techniques, there is negligible heat loss between the well-head and the heat exchanger (measured temperature drop is 0.1°C/km along the pipes).

Project lifetime

The current Hódmezővásárhely project has been operating for around 20 years (with an increasing number of wells) and its foreseen operation lifetime is another 25 years at the Effective Date of evaluation. The same lifetime is assumed here for the notional project.

Geothermal resources

Geothermal resource potential of the current Hódmezővásárhely project:

- Best Estimate: 5 PJ

Geothermal resource potential of the larger Hódmezővásárhely reservoir (notional project):

- Low estimate: 93 PJ
- Best Estimate: 210 PJ
- High Estimate: 366 PJ

UNFC-2009 classification

The production history of the currently operating Hódmezővásárhely district heating project shows that since 1994 approximately 0.2 PJ is produced annually, as reported by the Operator (depending on heat demand). On the other hand, the forecasted amount of available resources estimated for the entire reservoir volume of the site (93PJ – P90, 210 PJ – P50, 366 PJ – P10) is some orders of magnitude higher, which is due to the excellent reservoir properties and especially to the high recharge rates. Therefore, it is obvious that the present district heating project recovers only a small fraction of the potentially extractable heat that might be utilized in the future by another project(s) either parallel or in series with the present project. Therefore there are two ways to represent the UNFC-2009 classification of this area: (a) classify the current mature and operating project, forecasting its production history (that recovers only a small proportion of the available heat; and (b) classify the potential future project(s) that may utilize the available resources. Both scenarios are presented below:

E category classification and subclassification of the present project

Category	*UNFC-2009 definition*	*Reasoning for classification*
E1	Extraction and sale has been confirmed to be economically viable	
E1.1	Extraction and sale is economic on the basis of current market conditions and realistic assumptions of future market conditions.	• The project has been operating for 20 years and based on all experiences it is foreseen to run at least another 25 years. Total price of geothermal heat (4.0 Hungarian Forint (HUF)/MJ) is about 2/3 of the price of the imported gas (5.58 HUF/MJ) (2012 data, 300 HUF = 1 Euro), therefore the project is economic under the current market conditions and is supplying a substantial and existing heat market • It has very positive and quantified effects on the reduction of gas consumption and decreased CO_2 emission.

F category classification and subclassification of the present project

Category	*UNFC-2009 definition*	*Reasoning for classification*
F1	Feasibility of extraction by a defined development project or mining operation has been confirmed.	
F1.1	Extraction is currently taking place.	The gradually expanding project has been operating since 1954. All production licences available and secured in the long-term.

G category classification of the present project

Category	*UNFC-2009 definition*	*Reasoning for classification*
G1	Quantities associated with a known deposit that can be estimated with a high level of confidence.	Based on a production forecast a 5PJ heat energy to be extracted can be foreseen with a moderate level of confidence for the next 25 years (25 x 0.2 PJ).
G2	Quantities associated with a known deposit that can be estimated with a moderate level of confidence.	
G3	Quantities associated with a known deposit that can be estimated with a low level of confidence.	

UNFC-2009 classification and quantification of the present project

Classification	*Energy Quantity*	*Supplemental information*
E1.1; F1.1; G1+G2	5 PJ	Forecast of the production history

E category classification and subclassification of the potential future project(s)

Category	*UNFC-2009 definition*	*Reasoning for classification*
E3	Extraction and sale is not expected to become economically viable in the foreseeable future * or evaluation is at too early a stage to determine economic viability.	Based on the current project experiences and market conditions a similar project(s) is expected to become economically viable in the next 5–10 years to exploit the still available resources.

* Note that, as the "foreseeable future" has been defined as within a maximum of five years in the geothermal context, the expectation that the notional project will become economically viable in the next 5–10 year prompts the use of the E3 category.

F category classification and subclassification of the future potential project(s)

Category	*UNFC-2009 definition*	*Reasoning for classification*
F2	Feasibility of extraction by a defined development project or mining operation is subject to further evaluation.	At the moment no concrete development plans are available and future project(s) need new capital investments as well as licences, which are currently not initiated.

G category classification of the future potential project(s)

Category	*UNFC-2009 definition*	*Reasoning for classification*
G1	Quantities associated with a known deposit that can be estimated with a high level of confidence.	A volumetric Monte Carlo assessment has indicated a 90% probability of 93 PJ (low estimate) of recoverable geothermal energy. Therefore G1 is 93-5 PJ = 88 PJ (the 5 PJ is assigned to the currently operating project see above)
G2	Quantities associated with a known deposit that can be estimated with a moderate level of confidence.	A volumetric Monte Carlo assessment has indicated a 50% probability of 210 PJ (best estimate) of recoverable geothermal energy. Therefore G2 is 210-5-88=117 PJ
G3	Quantities associated with a known deposit that can be estimated with a low level of confidence.	A volumetric Monte Carlo assessment has indicated a 10% probability of 366 PJ (high estimate) of recoverable geothermal energy. Therefore G3 is 366-5-88-117=156 PJ

UNFC-2009 classification and quantification of the future potential project(s)

Classification: *UNFC-2009 Class*	*Energy Quantity*	*Supplemental information*
E3; F2; G1	88 PJ	90% probability of 93PJ (low estimate) of recoverable geothermal energy minus the foreseen total production (5PJ) of the current project
E3; F2; G2	117 PJ	A 50% probability of 210 PJ (best estimate) of recoverable geothermal energy, minus the foreseen total production of the current project, therefore G2 is 210-5-88=117 PJ
E3; F2; G3	156 PJ	A 10% probability of 366 PJ (high estimate) of recoverable geothermal energy minus the foreseen total production of the current project, therefore G3 is 366-5-88-117=156 PJ

References

Ádok, J. (2012): Geotermikus fűtési rendszerek- egy működő rendszer tapasztalatai – presentation at the national workshop of the Geo-DH (Promote Geothermal District Heating Systems in Europe) project, December 3, 2012, Budapest.

Bérczi, I., Phillips, R.L.(1985): Processes and depositional environments within deltaic-lacustrine sediments, Pannonian Basin, Southeast Hungary – *Geophysical Transactions,* 31, 55-74.

Dövényi, P., Horváth, F. (1988): A review of temperature, thermal conductivity and heat flow data from the Pannonian Basin, in: Royden, L.H., Horváth, F. (Eds): The Pannonian Basin a Study in Basin Evolution. – *American Association of Petroleum Geologist memoirs*, Tulsa, Oklahoma, 45, 195-233.

Horváth, F., Royden, L.H.(1981): Mechanism for formation of the intra-Carpathian basins: A review. – *Earth Evolutionary Sciences*, 1, 307-316.

Magyar, I., Geary, D.H., Müller, P.(1999): Paleogeographic evolution of the Late Miocene Lake Pannon in Central Europe. – *Palaeogeography, Palaeoclimatology, Palaeoecology,* 147, 151-167.

Szanyi, J., Kovács, B. (2010): Utilization of geothermal systems in South-East Hungary – *Geothermics* 39, 357-364.

Zilahi-Sebess L., Merényi, L., Paszera, Gy., Tóth, Gy., Boda, E., Budai, T.: Nyersanyag készletek, A hazai ásványi nyersanyag-potenciál, 5. Geotermikus energia, (Háttértanulmány), Nemzeti Energiastratégia, Készletgazdálkodási és hasznosítási cselekvési terv, Manuscript, (2012), 84 p.

Appendix 1 - Assumptions of volumetric Monte Carlo assessment

Estimation of recharge areas of production wells

The produced aquifer (Upper Miocene sandstone reservoir) is regionally extended in the entire basin, which is produced by many other users. Therefore it was necessary to determine the "impact area" of the project, i.e. the recharge area of the production wells belonging to the Hódmezővásárhely project. Production wells are closely spaced (few hundred metres from each other) (Figure 1). Results of previous hydrodynamic modelling in similar geological conditions at a nearby site showed that the recharge area of a well can be determined as follows: R = 0.8 x Q (Eq1) (Zilahi-Sebess et al. 2012); where R is the radius of the recharge area around a given well and Q is the yield of the well. In the present study, the 4 major production wells with high temperature (80-90°C) and yield (750 to 1,500 L/min) were considered (the other wells with either lower temperature or little yield within the impact area of the major producing wells were excluded).

Figure 1 shows the recharge areas of the single wells (black lines) (radius range from 600 to 1,200 m depending on the yield). The red line shows the cumulative area of the 4 individual areas which is 14.2 km^2 in total.

Figure 1
Hódmezővásárhely project – producing wells

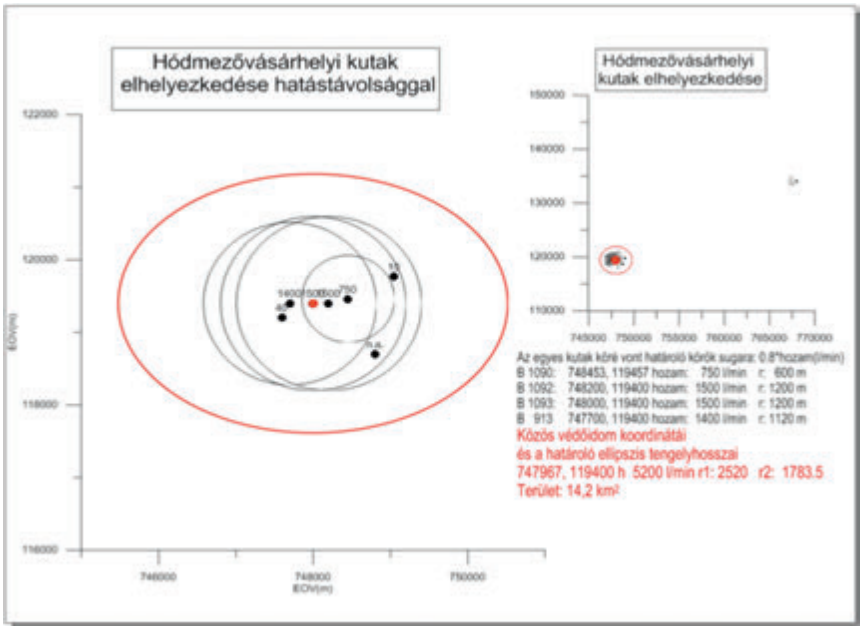

Table 1
Input values for Monte Carlo

Reservoir area (km^2)		*Reservoir thickness (m)*		*Reservoir temperature (°C)*		*Porosity (%)*		*Recovery factor*	
min	max	min	max	min	max	min	max	min	max
12.5	15.5	600	900	58	108	6	18	0.10	0.20

Case Study 7: Alto Peak

Project Location: Leyte, Philippines
Data date: December 2014
Date of evaluation: September 2015
Quantification method: Volumetric Stored Heat Assessment
Estimate type: Probabilistic

Project summary

The Alto Peak Geothermal Project in Leyte, Philippines, located on the south-eastern side of the Greater Tongonan Geothermal Field. The project area is within the Geothermal Renewable Service Contract (GRESC) 2009-10-001, a concession block (total area 504 km^2) awarded in 2009 by the Philippine Department of Energy to Energy Development Corporation (EDC), a fully privatized geothermal company. Alto Peak is part of what was known in the 1990s as Leyte-A geothermal project which aimed to generate an additional 640 MW_e of electric power utilizing the geothermal resources in Leyte.

The encouraging results of the earlier surface explorations studies led to the decision to finance a 3-well deep exploration program. From 1991 to 1992, three wells, AP-1D, AP-2D and AP-3D were drilled to test the exploration model, characterize and quantify the size of the geothermal resource.

Subsurface data from wells AP-1D and AP-2D indicated high resource temperature (>350°C) and high permeability, with an associated resource area of approximately 2 km^2. Petrological and fluid inclusion studies indicated that the Alto Peak geothermal system is old, waning but is rejuvenated by injection of heat and fluids from recent magmatic intrusions (Reyes et al., 1993). Discharge fluid chemistry also indicated a liquid-dominated reservoir with a temperature of approximately 350-400°C.

A 4-well delineation drilling programme was then recommended to define the extent of the productive temperatures, confirm additional resources outside the proven resource, further explore and test the candidate injection area northwest of the project. Further scientific studies, including detailed geological studies and surface resistivity measurements, were done to support the drilling of additional, deep, delineation production wells.

The feasibility study of the project in 1993 based on the last five wells drilled showed that the proposed 80 MW_e electric power development in the Alto-Peak is both technically and economically feasible. Thus, development drilling commenced in 1994 and was completed in 1995.

In 1997, the Alto Peak project was reviewed to determine the appropriateness of the resource for power development. The review indicated that that the system is non-commercial utilizing the existing technologies to address the acidic fluids and mineral scaling characteristics encountered during the discharge tests (PNOC-EDC, 1997). The review also pointed out that the boundaries of the resource has not been fully delineated and although Monte Carlo analysis using stored heat calculation method of reserve estimation indicated about 80 MW_e of reserve there is a high degree of uncertainty about the development potential of the project which is believed to be immature to allow commercial development and exploitation. As a result, the Alto Peak project was shelved in 1997 and only regular physical monitoring and blockage surveys of the wells were performed.

Alto Peak project

In 2014, EDC reviewed the Alto Peak project as part of the overall assessment of the potential growth project areas southeast of Tongonan, Leyte which included Janagdan, Mt. Lobi-Anonang, Mahagnao and Bato-Lunas project areas. The Alto Peak review was based on the result of the field geological and geochemical surveys undertaken from June to September of 2014. The geological studies included lithological mapping, structural mapping and tectonic interpretations. The geochemical surveys comprised of re-sampling of the thermal manifestations, review and re-interpretation of fluid and gas discharge data and stable isotopes. Review of the subsurface physical data was also made as part of the review. To date, nine production (two cement were plugged) and one injection wells were drilled within the project area. A Geothermal Energy Resource estimate based on the 1993 and 1997 and the 2014 data was also done to re-assess the area as a growth project.

Quantification

The quantification of energy for the project is based on the Volumetric Method using Monte Carlo simulation. The assumptions used about the volume of the reservoir were based on the resource assessment done in 1993 and 1997 with modifications as deemed appropriate based on the well baseline data.

The confidence level in the estimates is based on a Monte Carlo simulation of a Volumetric Heat assessment. The quantities associated with the high, medium and low level of confidence area based on 90, 50 and 10 percentile of the resulting cumulative probability distribution, respectively. Input variables are shown in the following table.

Input Variables	*Units*	*Most Likely*	*Min*	*Max*	*Mean*	*SD*	*Probability Distribution*
Area	km^2		0.3287	3.553			triangular
Thickness	m	1 700	1 300	1 950			triangular
Temperature	°C	260	220	345			triangular
Recovery factor					0.06	0.02	=f (porosity)
Load Factor		0.92	0.8	1.0			triangular
Rejection Temp	°C	180					Single value

Product type

The product type is electricity.

Reference Point

The reference point is at the station switchyard, where power is exported into the national grid in the Philippines. Internal power use or parasitic load has already been subtracted.

Geothermal Energy Resources

Geothermal Energy Resources:

- Low estimate (P90): 5 PJ (150 MW_e yr); 6 MW_e for 25 years
- Best Estimate (P50): 15 PJ (475 MW_e yr); 19 MW_e for 25 years
- High Estimate (P10): 34 PJ (1,075 MW_e yr); 43 MW_e for 25 years

UNFC-2009 classification

E category classification

Category	*UNFC-2009 definition*	*Supporting explanation*	*Reasoning for classification*
E2	Extraction and sale is expected to become economically viable in the foreseeable future.	Extraction and sale has not yet been confirmed to be economic but, on the basis of realistic assumptions of future market conditions, there are reasonable prospects for economic extraction and sale in the foreseeable future.	Heat available for exploitation and conversion to electricity not yet confirmed to be commercially viable, on the basis of realistic assumptions of future local market conditions. Project is however, expected to become commercially viable in the foreseeable future due to introduction of regulatory incentives (e.g. FIT for emerging technologies).

F category classification and subclassification

Category	*UNFC-2009 definition*	*Supporting explanation*	*Reasoning for classification*
F2	Feasibility of extraction by a defined development project or mining operation is subject to further evaluation.	Preliminary studies demonstrate the existence of a deposit in such form, quality and quantity that the feasibility of extraction by a defined (at least in broad terms) development project or mining operation can be evaluated. Further data acquisition and/or studies may be required to confirm the feasibility of extraction.	The existence of a geothermal resource has been confirmed by the result and assessment of 9 production wells and 1 injection well. Additional surveys (e.g. MT and gravity) are however, needed to refine the boundary of the resource. Current research is on-going on corrosion resistant alloys (CRA), scale inhibitors and improvement in well sustainability to demonstrate the commercial application of needed materials/resources.

Sub-category	*UNFC-2009 definition*		
F2.2	Project activities are on hold and/or where justification as a commercial development may be subject to significant delay.	Project activities are on-hold for reasons not related to the energy resource potential of the project or knowledge on the physical and geochemical potential of the resource; construction of a pilot electrical power generation facilities may be subject to significant delays.	The proposed development is on-hold due to concern on utilization of high temperature acidic fluids which is expected to affect commercial viability of the project. Material testing of wellhead, casings and related material is needed to demonstrate metallurgical viability and sustainability of operations

G category classification

Category	*UNFC-2009 definition*	*Reasoning for classification*
G1	Quantities associated with a known deposit that can be estimated with a high level of confidence.	A volumetric Monte Carlo simulation has indicated that there is a 90% probability that 6 MW_e can be produced for 25 years (5PJ).
G2	Quantities associated with a known deposit that can be estimated with a moderate level of confidence.	A volumetric Monte Carlo simulation has indicated that there is a 50% probability that 19 MW_e can be produced for 25 years (15 PJ). This equates to the best estimate, i.e. G1+G2, with G2 being incremental to G1. Thus, G2 is equal to 15-5=10 PJ.
G3	Quantities associated with a known deposit that can be estimated with a low level of confidence.	A volumetric Monte Carlo simulation has indicated that there is a 10% probability that 43 MW_e can be produced for 25 years (34 PJ). This equates to the high estimate, i.e. G1+G2+G3, with G3 being incremental to G1+G2. Thus, G3 is equal to 34-15=19 PJ.

UNFC-2009 classification and quantification

Classification	*Energy Quantity*	*Supplemental information*
UNFC-2009 Class	Energy units used: Peta-Joules (PJ)= (x10^{15} J)	
E2; F2.2; G1	5 PJ *	Low estimate of the geothermal energy resource; it is the P90 estimate.
E2; F2.2; G2	10 PJ *	Incremental between Best and Low estimates; the P50-P90 estimate (15-5 PJ), with G2 being incremental to G1.
E2; F2.2; G3	19 PJ *	Incremental between High and Best estimates; the P10-P50 estimate (34-15 PJ), with G3 being incremental to G1+G2.

* Energy quantities are subject to rounding

Disclaimer

Application examples are made only for the purpose of illustrating the applicability of UNFC-2009 to "real" geothermal energy projects. This application example, with facts and figures, is based on the Alto Peak project in the Philippines. Data and information is available in the public domain and in the referenced articles. Resource figures are loosely based on such available information.

References

Bustamante, C.C., 1993. Reservoir simulation of the Alto Peak geothermal field, Leyte, Philippines. UNU Report No. 5, UNU Geothermal Training Programme, Iceland, 29 p.

Philippine National Oil Company – Energy Development Corporation (PNOC-EDC), 1997. Alto Peak Geothermal Field Resource Assessment Review Report (final), prepared by Mesquite Group, Inc., Harding Lawson Associates, and Dames and Moore.

Reyes, A.G., W.G. Giggenbach, J.R.M. Salera, N.D. Salonga and M.C. Vergara, 1993. Petrology and geochemistry of Alto Peak, a vapor-cored hydrothermal system, Leyte Province, Philippines. *Geothermics*, Vol. 22, Issues 5-6, Special Issue, Geothermal Systems of the Philippines, 379-519.

Case Study 8: Baslay-Dauin

Project Location: Baslay-Dauin, Negros Oriental, Visayas, Philippines
Data date: August 2014
Date of evaluation: August 2015
Quantification method: Volumetric Heat Assessment
Estimate type: Probabilistic

Project summary

Baslay-Dauin geothermal project is located at the southern tip of Negros Island, Philippines and covers an area of 46 km^2 of the Southern Negros Geothermal Field.

Surface geothermal exploration activities were undertaken within the Baslay-Dauin Geothermal Project from 1973 to 1979 to investigate its geothermal potential. Drilling of two exploration wells, DN-1 and DN-2 were completed in 1982 and 1983, respectively. DN-1 encountered a temperature of 240 ^{o}C and near-neutral fluids with a maximum chloride content of 3,300 mg/kg but discharged large amount of elemental sulphur suggesting possible acid resource beneath the area drilled by DN-1. As a result of the first drilling, the second well DN-2 was drilled 4 km southwest of DN-1 to test the presence of an exploitable resource within the Nagpantaw low-resistivity anomaly (Harper and Arevalo, 1982).

The two exploration wells, DN-1 and DN-2 confirmed the presence of a geothermal energy source within the project area. Well data from DN-1 and DN-2 suggest that DN-1 was drilled closer to the heat source and interpreted upflow area while DN-2 lies within the periphery of the outflow area. The development of the project area was however, relegated to lower priority by the Energy Development Corporation (EDC) and development was instead focused on other high potential geothermal projects in the country (Bayrante et al., 1982).

Baslay-Dauin project

Between August 2013 and April 2014, EDC conducted geological, geochemical and geophysical survey (3G) campaigns within Baslay-Dauin project to re-evaluate the development potential of Baslay-Dauin as a candidate brown field growth area and to establish its hydrological relationship with the adjacent Southern Negros Geothermal Field (SNGPF). The project was included by the Department of Energy (DOE) of the Philippines in the geothermal sector road map which envisions an addition of 1,495 MW_e capacity to the grid over a planning period 2011-2030 (DOE, 2011). The result of the project resource assessment in 2014 infers a resource separate from SNGPF.

The power potential of the Baslay-Dauin geothermal resource was estimated based on the size of the resource defined by the Magneto-Telluric (MT) survey complemented by updated geological assessment and the result of the two exploration wells drilled in the project.

Quantification

The quantification of energy for the project is based on the Volumetric Method using Monte Carlo simulation. The assumptions used about the volume of the reservoir are based on the result of the MT surveys done in 2013 and additional surface data from geology and geochemistry interpretations. Assumptions about the reservoir temperature are based on the well DN-1.

The confidence level in the estimates is based on a Monte Carlo simulation of a Volumetric Heat assessment. The quantities associated with a high, medium and low level of confidence are based on 90, 50 and 10 percentile of the resulting cumulative probability distribution, respectively. Input variables are shown in the following table.

Input Variables	*Units*	*Most Likely*	*Min*	*Max*	*Mean*	*SD*	*Probability Distribution*
Area	km^2	4.43	3.58	7.63			triangular
Thickness	m	1 800	1 400	2 400			triangular
Temperature	°C	250	220	270			triangular
Recovery factor					0.06	0.02	=f (porosity)
Load Factor		0.92	0.8	1.0			triangular
Rejection Temp	°C	180					Single value

Product type

The product type is electricity.

Reference Point

The reference point is at the station switchyard, where power is exported into the national grid in the Philippines. Internal power use or parasitic load has already been subtracted.

Geothermal Energy Resources

Geothermal Energy Resources:

- Low Estimate (P90): 16 PJ (500 MW_e yr); 20 MW_e for 25 years
- Best Estimate (P50): 28 PJ (875 MW_e yr); 35 MW_e for 25 years
- High Estimate (P10): 43 PJ (1,400 MW_e yr); 55 MW_e for 25 years

UNFC-2009 classification

E category classification and subclassification

Category	*UNFC-2009 definition*	*Reasoning for classification*
E3	Extraction and sale is not expected to become economically viable in the foreseeable future or evaluation is at too early a stage to determine economic viability.	The evaluation of the economic viability of the project shall depend on the result of a surface geoscientific study and modelling which will serve as basis for the formulation of the exploration and delineation drilling program.
Sub-category	*UNFC-2009 definition*	
E3.2	Economic viability of extraction cannot yet be determined due to insufficient information (e.g. during the exploration phase).	Additional geophysical study and modelling (MT additional stations) to possible improve the quality of data. The MT data will be used to come up with a refine geophysical model which will serve as input in the stored heat estimates and revised volumetric stored heat estimates.

F category classification and subclassification

Category	*UNFC-2009 definition*	*Reasoning for classification*
F2	Feasibility of extraction by a defined development project or mining operation is subject to further evaluation.	The existence of a geothermal resource has been confirmed by the result of the deep exploration wells, existing resource assessment and stored heat calculation indicated the presence of a commercially productive resource. Additional MT surveys are however, needed to refine the model and the boundary of the resource. Additional exploration drilling and testing is needed to further evaluate the well discharge and resource characteristics.
Sub-category	*UNFC-2009 definition*	
F2.2	Project activities are on hold and/or where justification as a commercial development may be subject to significant delay.	The proposed development is on-hold pending results of further MT surveys, resource assessment and stored heat estimation. Further exploration and delineation drilling results also needed to justify commercial development. The project is included in the Philippine Energy Programme which is expected to be reviewed by the new administration in 2016.

G category classification

Category	*UNFC-2009 definition*	*Reasoning for classification*
G1	Quantities associated with a known deposit that can be estimated with a high level of confidence.	A volumetric Monte Carlo simulation has indicated that there is a 90% probability that 20 MW_e will be produced in the area for 25 years (16 PJ).
G2	Quantities associated with a known deposit that can be estimated with a moderate level of confidence.	A volumetric Monte Carlo simulation has indicated that there is a 50% probability that that 35 MW_e will be produced for 25 years (28 PJ). This equates to the best estimate, i.e. G1+G2, with G2 being incremental to G1. Thus, G2 is equal to 28-16=12 PJ.
G3	Quantities associated with a known deposit that can be estimated with a low level of confidence.	A volumetric Monte Carlo simulation has indicated that there is a 10% probability that 55 MW_e will be produced for 25 years (43 PJ). This equates to the high estimate, i.e. G1+G2+G3, with G3 being incremental to G1+G2. Thus, G3 is equal to 43-28=15 PJ.

UNFC-2009 classification and quantification

Classification	*Energy Quantity*	*Supplemental information*
UNFC-2009 Class	Energy units used: Peta-Joules (PJ) =(x10^{15}J)	
E3; F2.2; G1	16 PJ *	Low estimate of the geothermal energy resource; it is the P90 estimate.
E3; F2.2; G2	12 PJ *	Incremental between Best and Low estimates; the P50-P90 estimate (28-16 PJ), with G2 being incremental to G1.
E3; F2.2; G3	15 PJ *	Incremental between High and Best estimates; the P10-P50 estimate (43-28 PJ), with G3 being incremental to G1+G2.

* Energy quantities are subject to rounding.

Disclaimer

Application examples are made only for the purpose of illustrating the applicability of the UNFC-2009 classification framework to a "real" geothermal energy projects. This application example, with facts and figures, is based on the Baslay Dauin project in the Philippines. Data and information are available in the public domain and in the referenced articles. Resource figures are loosely based on such available information.

References

Bayrante *et al.*, 1997.A review of the origin of sulphur in DN-1 discharge and its implication for future development, Dauin geothermal prospect, Central Philippines.*GRC Trans*. Vol. 21, p. 603-608.

Bayrante *et al.*, 1997. Development potential of the Dauin geothermal prospect, Negros Oriental, Philippines. *GRC Trans*. Vol. 21, p. 609-615.

Department of Energy, Philippines, 2011. Renewable Energy Plans and Programs (2011-2030), 67 p.

Harper, R. T. and E. M. Arevalo, 1982. A geoscientific evaluation of the Baslay-Dauin prospect, Negros Oriental, Philippines. *Proc*. Pacific Geothermal Conference and New Zealand Geothermal Congress.

Case Study 9: Canavese GeoDH System

Project Location: Milan, Italy
Data date: 2010
Date of evaluation: December 2015
Quantification method: Simulation
Estimate type (deterministic/probabilistic): Deterministic scenario

Project summary

The Project concerns the integration of a groundwater heat pump unit (GWHP) within the district heating system of "Canavese" (Milan, Italy). In light of its expertise in cogeneration, district heating (DH) networks, and heat pump applications, A2A S.p.A (ex AEM) has decided to exploit the significant groundwater availability in the Milan area for energy purposes. The company started a development plan for integrating GWHPs within part of the already existing DH generation plants, one of them being "Canavese".

This document illustrates the project according to the geothermal specifications of UNFC-2009.

Local and hydrogeological context

Milan is the second most populated Italian city (1.3 million residents): it is characterized by a polycentric metropolitan area, known as "Greater Milan", of more than 5 million people in 2,945 km^2 (1,651 people/km^2). Milan is the main industrial, commercial, and financial centre of Italy; the total primary energy demand for the heating of buildings is approximately 10^6 toe per year [1].

The city is located in northern Italy, at the centre of the largest alluvial plain of the country (*Po valley*) in a very favourable area for groundwater exploitation. The hydrological context is characterized by numerous rivers, together with a relevant network of artificial channels and natural springs. Geologically, the shallow aquifer layer (up to a depth of 30 – 50 m) is composed of gravel and coarse sand that constitutes a first unconfined aquifer. Then, a thin clay layer and a second stratum of coarse /medium sand, gravel and clay constitute a second semi-confined aquifer up to a depth of 100-150 m. Groundwater moves from the North and North-West (recharge area) to the South, towards the Po river. The aquifer recharge is mainly provided by local and Alpine precipitations (880 – 1,300 and 1,000 – 2,200 mm/yr, respectively), together with infiltration of surface water from rivers and channels.

Historically, the Milan area is characterized by significant groundwater pumping for residential and industrial uses. During the seventies, several thousands of wells operated in the area, with a maximum water production of over one billion cubic meter per year. Since the eighties, groundwater extraction has significantly reduced, due to the transfer of industrial activity outside the urban area. Consequently, the water level has risen, resulting in frequent flooding of basement levels. Today, hundreds of wells operate to lower the water table around buildings, discharging the fluid in surface channels without any utilization. However, the water level remains at few meters deep in many parts of the city, with associated flooding risk.

The energetic use of groundwater is continually increasing in the Milan area, also thanks to a promoting action by the local public administration. Despite some outstanding issues with installation authorization and operative regulation, many GWHPs have been installed in the urban area, demonstrating the favourability and the viability of this technology in the local context.

Canavese plant description

The heat generation plant of Canavese represents the first Italian experience of a groundwater heat pump coupled to a large district heating systems. The previously existing apparatus consists of a cogeneration plant composed of three natural gas engines with a total of 15.1 MW_{el} installed. The total thermal power recovered by exhaust gases and intercooling is about 13.2 MW_{th}. A total capacity of 45.0 MW_{th} of boilers is installed with peaking/back-up purposes.

A 15 MW_{th} heat pump is going to be installed in the above-described generation system in order to exploit the abundant availability of groundwater in the area (see previous section) with relevant benefits in terms of primary energy savings, and reduction of fossil fuel consumption and gas emissions.

Groundwater represents the cold thermal source: it is extracted from the shallowest aquifer by means of six wells (at a depth of 25-30 meters) at a temperature of 15°C. Nominal flow rate and temperature drop at the evaporator are approximately 1100 m^3/h and 7°C, respectively. The disposal system comprises three injection wells together with surface discharge in the nearby Lambro River. The pumping energy required by the ground-coupled loop is about 15% of the energy input to the HP compressor. Nominal supply temperature to the DH network is equal to 90°C with a temperature drop of almost 25°C in the condenser. Thermal energy produced by the HP, heat recovery from gas engines and back-up boilers can be directly delivered to the district heating network or it can be accumulated in storage tanks (3,000 m^3).

HP technology is based on specific expertise gained with DHs in Sweden. Under the above-described thermal sources conditions, the HP unit is able to deliver 15 MW_{th} with a nominal Coefficient of Performance (COP) of 3. The conceptual scheme and the nominal data of Canavese DH plants layout are summarized in Figure 2 and Table 1, respectively.

Quantification

Both the equipment design and the quantification of energy fluxes during the expected operational lifetime (20 years) have been performed through a Mixed Integer Linear Programming (MILP) optimization algorithm aimed at assessing the best design of the system and related management. The employed objective function is the net present value at the end of system lifetime. It results from the cumulative difference between incomes from sales of electrical and thermal energy and installation expenditure, operating and maintenance costs. More details on the optimization procedure can be found in [1].

The accuracy of the simulation model is related to three main factors: (a) the prediction of the thermal load evolution during the Project lifetime (20 years); (b) the actual deviation between nominal and operative efficiency of the heat generators (HP included); and, (c) the actual "equivalent full load hours" of the heat generators (HP included). More details on the simulation assumptions can be found in [1].

Product type

This Project produces two energy products: the electricity output from the CHP engines and the heat delivered to the DH network. However, in this case, the electricity generation is not derived from a Geothermal Energy Source. Therefore, the electrical output does not qualify as Geothermal Energy Product, though it has an impact on the Project's economic evaluation.

In this Project, there is a *hybrid* Geothermal Energy Product corresponding to the *heat* delivered to the DH network (point D in Figures 1 and 2). It is given by the combination of the thermal energy delivered by the gas engines and back-up boilers, together with the thermal output of the GSHP unit (point B in Figures 1 and 2).

The cumulative energy exchanged in the HP evaporator (point A in Figures 1 and 2), corresponds to the energy extracted from the actual Geothermal Energy Source.

Reference Point

According to the definition given in Section A of the geothermal specifications, Geothermal Energy Resources are the cumulative quantities of Geothermal Energy Products that will be extracted from the Geothermal Energy Source. Thus, in order to exclude the electricity generation component (which is not derived from a Geothermal Energy Source in this case), point A should be selected as the Reference Point for reporting the true Geothermal Energy Product and Geothermal Energy Resources.

On the other hand, it is recognized that point B may be more meaningful in terms of what is actually delivered by the overall GSHP system, although both the product and the resource at that location would have to be viewed as "hybrid" (i.e. only partially geothermal).

According to Figures 1 and 2, the assessment of the overall energy balance of the Project is based on four points of evaluation in order to distinguish the energy exchanged with the ground source (point A), the thermal output of the heat pump unit (point B), the driven energy (point C), and the total heat delivered to the DH network (point D). Other significant energy quantities and corresponding points of evaluations are shown in Figure 2. Points B and D refer to hybrid energy quantities given by the combination of different forms of energy, of which only one is geothermal.

In this assessment, point A is chosen as Reference Point to report and classify the Geothermal Energy Resources according to UNFC-2009. For clarity, all the main energy quantities are summarized in Figure 2 and Table 2.

Figure 1
Points of reference for the assessment of GSHP projects in heating mode

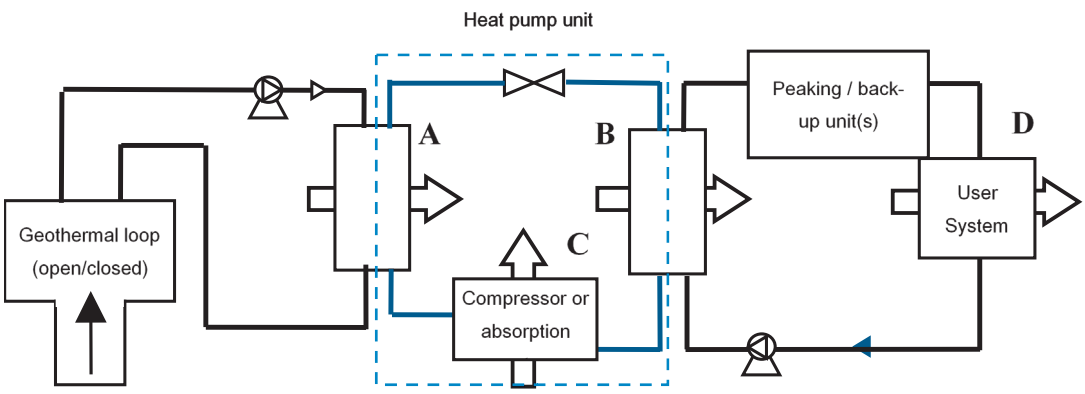

Figure 2
Simplified scheme and energy fluxes of *"Canavese"* plant*

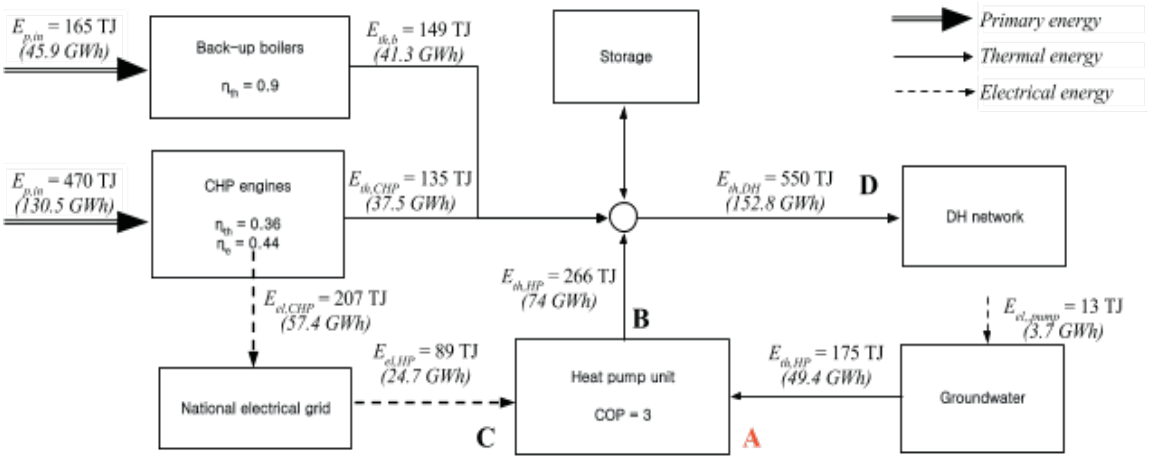

*.Quantities shown are based upon a reference year of operation. The letters A, B, C and D indicate the four points of evaluation for GSHP analysis illustrated in Figure 1. The Reference Point for the evaluation of the Geothermal Energy Resources is highlighted in red (point A).

Table 1
Nominal capacities and efficiencies of the "Canavese" heat generation plant

Heat generator	*Electrical capacity*	*Electrical efficiency*	*Thermal capacity*	*Thermal efficiency / COP*
Gas engines	15.1 MW_{el}	0.44	13.2 MW_{th}	0.36
Heat pump*			15.0 MW_{th}	3
Boilers			45.0 MW_{th}	0.9
Total	15.1 MW_{el}		73.2 MW_{th}	

* Delivery temperature of the DH network: 90°C.

Table 2
Energy quantities over Project lifetime (20 years) and points of evaluations

Estimate	*Point A**	*Point B**	*Point C**	*Point D**
Low estimate	-	-	-	-
Best estimate	3.5 PJ	5.3 PJ	1.8 PJ	11 PJ
High estimate	-	-	-	-

* For location of the reference point see Figure 1 & 2.

UNFC-2009 classification

E category classification and subclassification

Category	*UNFC-2009 definition*	*Reasoning for classification*
E1	Extraction and sale has been confirmed to be economically viable	Well testing, previous experience and simulation results have shown the feasibility and the viability of the Project, also considering the regulatory framework and the social acceptability in the Milan area. All necessary approvals have been confirmed by the competent authorities.
Sub-category	*UNFC-2009 definition*	
E1.1	Extraction and sale is economic on the basis of current market conditions and realistic assumptions of future market conditions	

F category classification and subclassification

Category	*UNFC-2009 definition*	*Reasoning for classification*
F1	Feasibility of extraction by a defined development project or mining operation has been confirmed	The Project concerns the installation of a groundwater heat pump in an already-operative heat generation plant of a DH network.
Sub-category	*UNFC-2009 Definition*	
F1.3	Sufficiently detailed studies have been completed to demonstrate the feasibility of extraction by implementing a defined development project or mining operation.	A2A expertise in DH design and management, simulation results, the use of established technologies, and the favourable conditions of the ground source lead to the confirmation of the Project feasibility.

G category classification

Category	*UNFC-2009 definition*	*Reasoning for classification*
G1 *	Quantities associated with a known deposit that can be estimated with a high level of confidence.	The level of uncertainty of reported energy quantities is not related to the ground source characterization as the hydrogeological conditions of the area have been already assessed through the operation of neighbouring wells for decades. Simulation accuracy is related to the assumptions on heat generators efficiency, thermal load prediction, and energy prices evolution over system lifetime.
G2 *	Quantities associated with a known deposit that can be estimated with a moderate level of confidence.	

Note that the classification as G1+G2 was based on the results published in [1], obtained from the application of an optimization algorithm with project's NPV as the objective function, and assuming only one load scenario. A final classification, including the provision of a G1 and a G3 estimate, would be required to provide an indication of the full range of uncertainty in the estimate.

UNFC-2009 classification and quantification

Classification	*Energy Quantity*	*Supplemental information*
UNFC-2009 Class		Energy quantities refer to the groundwater HP unit only. Other significant energy fluxes are shown in Fig. 2.
E1.1; F1.3; G1+G2	Reference Point A *: 3.5 PJ	Nominal heating capacity of the HP unit: 15 $MW_{th.}$ Nominal COP: 3. Assumed Project lifetime: 20 years. Ground-coupled apparatus deliver almost 50% of the total heating output of the overall generation plant.

* For explanations on points of reference, the reader can refer to Figures 1 and 2.

Reference

[1] Sparacino M, Camussi M, Colombo M, Carella R, Sommaruga C, "The world's largest geothermal district heating using groundwater under construction in Milan (ITALY): AEM unified heat pump project", Proceedings of EGC 2007, Unterhaching, Germany, 30 May – 1 June 2007.

Case Study 10: Vertical Ground-Coupled Heat Pump System

Project Location: Italy
Data date: 2013
Date of evaluation: May 2015
Quantification method: Simulation
Estimate type (deterministic/probabilistic): Deterministic

Project summary

The Project concerns the installation of a Vertical Ground-Coupled Heat Pump system (V-GCHP) in an office building located in Pisa, Italy. Both heating and cooling services are provided. The overall Ground Source Heat Pump (GSHP) system consists of 10 vertical boreholes (BHEs), a GCHP unit, and an air-coupled heat pump (AHP) as peaking/back-up generator. Fan coil units are used as the heat terminal unit.

This document illustrates classification of the project according to the UNFC-2009 geothermal specifications.

Reference building and thermal load

End-user thermal load shows the typical profile of office buildings located in a Mediterranean climate, with both heating and cooling demands. The load profile was evaluated over a typical meteorological year (TMY) [1] through a commercial dynamic building energy simulator. The main data on the building's thermal load are shown in Table 1.

Table 1
Monthly heating and cooling loads for the building

Parameter	*Value*
Annual heating demand [a] – MWh	68 (245 MJ)
Annual cooling demand [b] – MWh	80 (288 MJ)
Peak heating load – kW	40
Peak cooling load – kW	60

[a] Delivery temperature of the building end-user loop: 45°C.

[b] Delivery temperature of the building end-user loop: 7°C.

Ground reservoir

The ground source was investigated through a thermal response test (TRT), following the procedure described in current technical standards [2]. The ground volumetric capacity was assumed to equal 2.25x106 J/(m^{3}K). Groundwater effects are negligible. The effective thermal conductivity and diffusivity resulting from TRT are shown in Table 2.

Ground-coupled heat exchangers (vertical borehole heat exchangers)

BHE field is made of 10 boreholes (closed-loop) with a typical 3x3-plus-1 matrix arrangement and double "U-tube" configuration. The borehole thermal resistance [3], R_b, was evaluated using a 2D-FEM simulation. The geometrical and thermal characteristics of the boreholes are summarized in Table 2.

Table 2
Ground thermal properties and BHEs thermal and geometrical characteristics

Parameter	*Value*
Ground source	
Ground thermal conductivity - W/(m·K)	1.8
Ground thermal diffusivity - mm^2/s	0.8
Ground-coupled heat exchangers	
BHE depth – m	100
BHE diameter – cm	15
BHE configuration	Double U
BHEs number	10
Spacing between boreholes [m]	10
BHE pipe diameter (outer – inner) [cm]	4 – 3.4
U shank spacing [cm]	9.5
BHE thermal resistance [m·K/W]	0.06

Heat generators: GCHP and back-up unit

In this Project, an electrically-driven water-to-water HP with variable capacity control units is considered as main heating and cooling generator. Nominal performance data are shown in Table 3. The Coefficient of Performance (COP) and the Energy Efficiency Ratio (EER) are the useful thermal power divided by power input in heating and cooling mode, respectively.

Table 3
Nominal performances of the GCHP at rating conditions [4]

Ground-coupled unit			
Heating capacity	Cooling capacity	COP	EER
39.2 kW	58.2 kW	3.9	4

The heating and cooling back-up/peaking unit consists of an electrically-driven air/water reversible heat pump unit with variable capacity control. Nominal performance data are shown in Table 4.

Table 4
Nominal performances of the AHP at rating conditions [4]

Air -coupled unit			
Heating capacity	Cooling capacity	COP	EER
11.8 kW	17.5 kW	2.6	2.7

The air unit is supposed to operate during mild months when the capacity ratio of the GHP would be lower than the minimum allowable compressor speed (i.e. out of control range). Consequently, the air-source HP unit operates during those months in which outdoor temperature is sufficiently high to avoid freezing issues.

Quantification

Both the equipment design and the quantification of energy fluxes during the operative lifetime (20 years) have been performed by an in-house model based on current technical standards and scientific literature. More details on the simulation procedure can be found in [3].

The accuracy of the simulation model is mainly related to the thermal load prediction over the Project lifetime (20 years). Moreover, no ageing effects were considered in the evaluation of equipment performance.

Product type

In this Project, there is a *hybrid* Geothermal Energy Product corresponding to the heat delivered to the end-user system (point D in Figure 1(a)). Besides, the heat removed during the cooling season (point D in Figure 1(b)) must also be considered, as it has a relevant impact on the heat transfer process with the ground source (point A in Figures 1(a) and 1(b)) and, consequently, on the Project's technical and economic evaluations.

The contribution of the GSHP unit to the final energy product should be evaluated at point B, both in heating and cooling mode. However, both the product and the resource at that location would have to be regarded as "hybrid" (i.e. only partially geothermal). Finally, the energy exchange with the Geothermal Energy Source corresponds to the heat transfer at the ground-coupled heat exchanger (point A in Figures 1(a) and 1(b)).

Reference Point

According to Figures 1a and 1b, the assessment of the overall energy balance of the Project is based on four points of evaluation in order to distinguish the energy exchanged with the ground source (point A), the thermal output of the heat pump unit (point B), the driven energy (point C), and the total heat delivered to the end-user system (point D). Points B and D refer to *hybrid* energy quantities given by the combination of different forms of energy, of which only one is geothermal.

Despite the advantageous effect of the summer operation in terms of Project viability and sustainability, the actual energy extracted from the Geothermal Energy Source corresponds only to the cumulative energy exchanged in the HP evaporator during the heating period (point A in Figure 1(a)).

In this assessment, point A is chosen as the *Reference Point* to report and classify the Geothermal Energy Resources according to UNFC-2009. For clarity, all the main energy quantities are summarized in Figures 1(a) and 1(b), Table 5, and Table 6.

Table 5
Energy quantities over Project lifetime (20 years) and corresponding points of evaluations

Estimate	*Point A**	*Point B**	*Point C**	*Point D**
Low estimate	-	-	-	-
Best estimate *heating mode* *cooling mode*	 3.2 TJ 5.3 TJ	 4.0 TJ 4.5 TJ	 0.8 TJ 0.8 TJ	 4.9 TJ 5.8 TJ
High estimate	-	-	-	-

* For location of the reference point see Figures 1(a) and 1(b).

UNFC-2009 classification

E category classification and subclassification

Category	*UNFC-2009 definition*	*Reasoning for classification*
E1	Extraction and sale has been confirmed to be economically viable.	The Project is waiting for the start of implementation. Funding has been confirmed and there are reasonable expectations that all necessary approvals will be obtained within a reasonable timeframe.
Sub-category	*UNFC-2009 definition*	
E1.1	Extraction and sale is economic on the basis of current market conditions and realistic assumptions of future market conditions.	

F category classification and subclassification

Category	*UNFC-2009 definition*	*Reasoning for classification*
F1	Feasibility of extraction by a defined development project or mining operation has been confirmed	The Project relies on proven technologies. The presence of similar projects nearby supports the feasibility of the Project.
Sub-category	*UNFC-2009 definition*	
F1.3	Sufficiently detailed studies have been completed to demonstrate the feasibility of extraction by implementing a defined development project or mining operation.	

G category classification and subclassification

Category	*UNFC-2009 definition*	*Reasoning for classification*
G1 *	Quantities associated with a known deposit that can be estimated with a high level of confidence.	The level of uncertainty of reported energy quantities is not related to the ground source characterization as geological conditions of the area have already been assessed by previous investigations and TRT. Simulation accuracy is related to the thermal load prediction, equipment performance evaluation, and energy prices evolution over system lifetime.
G2 *	Quantities associated with a known deposit that can be estimated with a moderate level of confidence.	

* Note that the classification as G1+G2 was obtained from the application of only one load scenario based on local TMY [1] and standard gains profiles (e.g. people, electric devices etc) of office buildings. A final classification, including the provision of a G1 and a G3 estimate, would be required to provide an indication of the full range of uncertainty in the estimate.)

UNFC-2009 classification and quantification

Classification	*Energy Quantity*	*Supplemental information*
UNFC-2009 Class		Energy quantities refer to the ground-coupled HP unit. Figures 1(a) and 1(b) show a simplified scheme of significant energy fluxes.
E1.1; F1.3; G1+G2	Reference Point A *: 3.2 TJ *(Heating mode)*	Assumed Project lifetime: 20 years. Ground-coupled apparatus delivers almost 83% and 77% of the total heating and cooling load, respectively. Average COP of the ground-coupled HP unit :4; Average EER of the ground-coupled HP unit: 5;

* Points of reference are shown in Figures 1(a) and 1(b).

Figures 1(a) and 1(b)
Points of evaluation for the assessment of GSHP projects in heating and cooling mode

(Figure 1(a) - Heating mode)

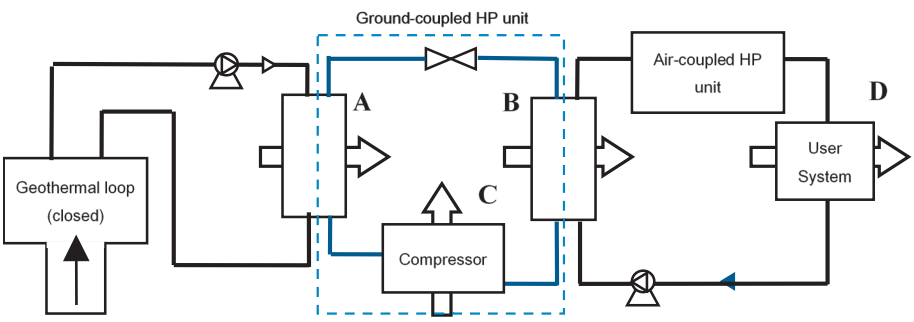

(Figure 1(b) - Cooling mode)

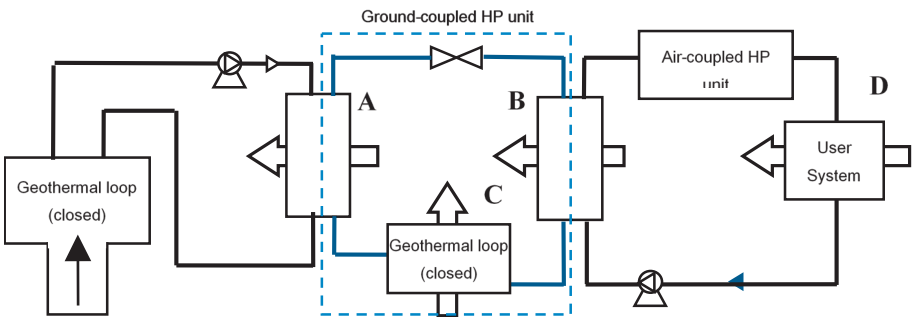

Table 6
Main performance indexes and data of the GSHP operation (20 years)

Parameter	*Value*
Overall primary energy consumption	7.2 TJ (2 000 MWh)
Energy delivered by GSHP in heating mode (Point B)	4.0 TJ (1 115 MWh)
Energy removed by GSHP in cooling mode (Point B)	4.5 TJ (1 240 MWh)
Fraction of the heating load delivered by GSHP system	0.83
Fraction of the cooling load delivered by GSHP system	0.77
<COP> of GSHP system (aux. included)*	4.26
<EER> of GSHP system (aux. included)*	3.62
<COP> of ASHP system	2.71
<EER> of ASHP system	3.16
Energy extracted from ground-source in heating mode (Point A)	3.2 TJ (896 MWh)
Energy delivered to the ground-source in cooling mode (Point A)	5.3 TJ (1 485 MWh)

* Overall <COP> and <EER> also include the pumping energy required in the ground-coupled loop.

References

[1] CTI. Typical Meteorological Year. Milan (IT): Italian Committee of Thermotechnics (CTI); 2012

[2] ASHRAE. Geothermal energy, in ASHRAE Handbook - HVAC Applications. Atlanta (GA): American Society of Heating, Refrigerating and Air-Conditioning Engineers (ASHRAE); 2011. –34.4.

[3] Grassi W, Conti P, Schito E, Testi D. On sustainable and efficient design of ground-source heat pump systems. Journal of Physics: Conference Series 655 (1), 012003; 2015.

[4] UNI. UNI EN 14511-2. Air conditioners, liquid chilling packages and heat pumps with electrically driven compressors for space heating and cooling. part 2: test conditions. Milan, 2013.

Case Study 11: Aggregation GSHP-Potential, North Rhine Westphalia

Location state: North Rhine Westphalia (NRW), Germany
Data date: 2015
Date of evaluation: January 2016
Quantification method: Official potential study by LANUV, NRW, Germany
Estimate type (deterministic/probabilistic): Deterministic incremental

GSHP-Potential, North Rhine Westphalia, Germany, project summary[3]

In 2015, the State Agency for Nature, Environment and Consumer Protection of North Rhine Westphalia (NRW) presented an aggregated potential study for the usage of Ground Source Heat Pump (GSHP) systems. The study assesses the potential of the GSHP system with a maximum drill depth of 100m.

Aside from the geological potential, actual demand influences the technical limits of using such potential. The study aggregates the potential of 3.6 million parcels of land and compares the extractable heat and the individual demand of an existing building on that piece of land. The evaluation is carried out in 3 steps:

(i) Calculating the geothermal energy potential of the parcel of land, which is extractable by an optimal GSHP arrangement. The electrical power to run the heat pump is then added to the calculated potential, using an average Coefficient of Performance (COP) of 3.8.

(ii) Calculating the heat demand of the building(s) on this parcel (the heat sink), depending on size, the number of floors, type of use of the building, etc.

(iii) Defining as 'potential' of this parcel of land which is the smaller of the two above values. For parcels without a building, the potential is zero, as there is no market.

To calculate the extractable heat, the area (m^2), the subsurface characteristics, the local climatic conditions and possible legal or regulatory restrictions are considered in the study. For extraction calculations, a standardized borehole layout is assumed, which is adapted to the size of the parcel of land under consideration, where the parcel is replaced by an equivalent square with the same area (in m^2). The area covered by a building or buildings is excluded from the calculation.

As the first step of the aggregation, all parcels of land in NRW were researched to decide if a GSHP system would be feasible on that parcel, and only those parcels containing a heat sink (e.g. a building) were taken into account. Parcels of land used for traffic-infrastructure, pieces with non-heated buildings (such as storage houses) and those in areas with regulatory restrictions, such as water supply areas, were excluded.

In a second step, the theoretical geothermal potential for the remaining "net-owned units" was determined, taking into account restrictions on critical hydrogeological areas and other restricted areas, such as those with near-surface mining.

[3] Potenzialstudie Erneuerbare Energien NRW
Teil 4 - Geothermie
LANUV-Fachbericht 40
Landesamt für Natur, Umwelt und Verbraucherschutz Nordrhein-Westfalen.

The theoretical usable potential was calculated on the basis of subsurface temperature and conductivity maps available from the Geological Survey of NRW. Standard values for double-U-tube borehole heat exchanger, diameters, filling material and working fluids were used, with a drilling depth of 100m (40m in some restricted areas).

Finally, the heat demand (i.e. the available heat market) was quantified for each piece of property using local climatic conditions and benchmark building characteristics. The following categories of the building were used in the study:

- building without heating (zero heat demand)
- building for housing (standard heat demand)
  - heat demand 150 kWh/m^{2}a + hot water 15 kWh/m^{2}a, usage hours: 2100 h/a.
- commercial buildings with higher-than-average heat demand
  - heat demand 300 kWh/m^{2}a
- commercial buildings with lower-than-average heat demand
  - heat demand 75 kWh/m^{2}a.

More details on the heat demand estimation are provided in [1].

This assessment is made only on the basis of the information publicly available and reported in the reference below.

Quantification

The results for the 3.6 million parcels of land were aggregated at three levels, giving quantifications at city, region and state level, respectively. The additional heat demand potential of future new building was estimated based on the development scenarios delivered from the cities. For simplicity, it is assumed here that the estimates associated with old and new buildings fall all under the same E-F-G classification, therefore permitting their aggregation (see section K, "Aggregation of quantities", in UNFC-2009).

The aggregation results read:

- Total heat demand of existing buildings: 975 PJ /yr (271.1 TWh/y).
- Fraction of the total heat load deliverable by means of GSHPs: 533 PJ/yr (153.7 TWh/y) – this means that GSHP can satisfy 56.7% of the entire heating demand in NRW.
- Additional heat demand for new buildings estimated to be built within the lifetime of the project: 1.5 PJ/yr (426 GWh/y).

The values 153.7 TWh/y and 426 GWh/y are used in the commodity quantification.

The statistical lifetime of heating systems in NRW is 35 years, which is also assumed in this study (where it is also assumed that *there are reasonable prospects for economic extraction and sale in the foreseeable future* from old and new buildings installations). Thus, the final energy commodity deliverable by GSHPs is 19.4 EJ, based on existing buildings only. If the heat demand of new buildings (53.7 PJ) is additionally taken into account, then the total deliverable heat is estimated to be almost 19.5 EJ. These values are taken as best estimates for classification purposes.

Product type

In this Project, the Geothermal Energy Product corresponds to the heat delivered to the buildings (point D in Fig. 1). Both the product and the resource at that location would have to be regarded as "hybrid" as they are given by the combination of different forms of energy, of which only one is geothermal (point A in Fig. 1). All the reported quantities result from the aggregation of the energy exchanged in each single Project.

Reference Point

According to Figure 1, the assessment of the overall energy balance of a GSHP system should be based on four points of evaluation in order to distinguish the energy exchanged with the ground source (point A), the thermal output of the heat pump unit (point B), the driven energy (point C), and the total heat delivered to the end-user system (point D). Points B and D refer to *hybrid* energy quantities given by the combination of the energy excreted by the ground source (point A), the energy input at the compressor (electrically driven heat pumps are considered), and the contribution of peaking/back-up generators.

In this assessment, point D is chosen as *Reference Point* to report and classify the Geothermal Energy Resources according to UNFC-2009.

Figure 1
Points of reference for the assessment of GSHP projects in heating mode

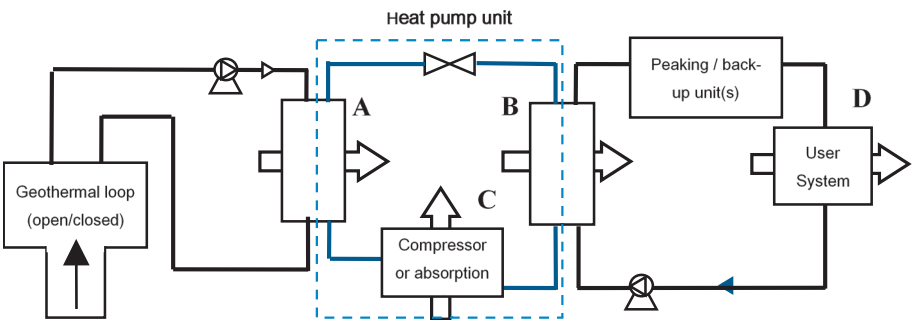

UNFC-2009 classification and quantification

Classification	*Energy Quantity*	*Supplemental information*
UNFC-2009 Class	**Commodity: Heat**	
E2; F1.3; G1 *+G2 *	19.4 EJ + *53.7 PJ*	End-user thermal load that can be satisfied from GSHPs based on capacity of the individual parcels and existing buildings. It includes electrical power to run the heat pumps. Average COP: 3.8. The incremental heat demand of new buildings is also included in the estimate. The sum of the quantities associated with existing and new buildings is taken as best estimate.

* Note that the classification as G1+G2 is based on a simplified evaluation of public domain information; a final classification, including the provision of separate G1 and G3 estimates, would be required to provide an indication of the full range of uncertainty in the estimate.

E category classification

Category	*UNFC-2009 definition*	*Reasoning for classification*
E2 *	Extraction and sale is expected to become economically viable in the foreseeable future	The LANUV study is based on real data gained from thousands of drilled holes and other information, such as data from the official NRW cadaster. Thousands of new wells are drilled every year. Therefore, there are reasonable prospects for successful implementation in the foreseeable future.

* Note that a more thorough evaluation should assess the likelihood of all the buildings being built in the foreseeable future, i.e. within 5 years from the date of the evaluation. If there are no reasonable prospects that this will be the case, then all or part of the estimated quantities should be classified as E3 instead of E2.

F category classification and subclassification

Category	*UNFC-2009 definition*	*Reasoning for classification*
F1	Feasibility of extraction by a defined development project or mining operation has been confirmed	The NRW potential study is regarded as a sufficiently detailed study. Over 40 000 shallow installations have been realized in NRW already, with a detailed understanding of the near surface potential. Also, the extraction technology is well established.
Sub-category	*UNFC-2009 definition*	
F1.3	Sufficiently detailed studies have been completed to demonstrate the feasibility of extraction by implementing a defined development project or mining operation.	

G category classification

Category	*UNFC-2009 definition*	*Reasoning for classification*
G1	Quantities associated with a known deposit that can be estimated with a high level of confidence	Thousands of wells have already been drilled in NRW and therefore the Geothermal Energy Source can be considered “known”. The results of the studies are regarded as best estimates and therefore classified as G1+G2.
G2	Quantities associated with a known deposit that can be estimated with a moderate level of confidence	

Reference

[1] http://www.lanuv.nrw.de/uploads/tx_commercedownloads/30040d.pdf

Case Study 12: Pauzhetsky geothermal field

Location: Pauzhetka, Kamchatka, Russian Federation
Data date: 2016
Date of evaluation: March 2016
Quantification method: Extrapolation of production history, iTOUGH2-modelling
Estimate type (deterministic/probabilistic): Deterministic scenarios

Project summary

The development of the Pauzhetsky geothermal field located in the Kamchatka Peninsula of Far East Russia started in 1960. In 1966, a 5 MW_e power plant was put into operation, which was replaced in 2006 by a new 6 MW_e unit. The first reservoir engineering studies of the field (Piip,1965; Sugrobov, 1970) revealed a liquid-dominated reservoir in layered tuffs at temperatures of 170–190 °C, with hot springs discharges at 31 kg/s. The first 10 years of exploitation at a total mass rate of 160–190 kg/s showed a gradual temperature decline and chloride dilution in the fluids produced by wells located near the natural discharge area. Consequently, new exploration and development wells were drilled, and exploitation gradually shifted away from the natural discharge area until fluid temperatures of 200–220 °C were reached. Production wells were drilled into a central upflow zone located 1.5–2.0 km southeast of the old production field. The drop in temperatures and enthalpies continued, while the total mass flow rate reached 220–260 kg/s between 1975 and 2006. iTOUGH2 inverse modelling (2008) help verify the conceptual hydrogeological model of the system, to identify key parameters, and to obtain more reliable parameter estimates and subsequent predictions. The TOUGH2 forward and iTOUGH2 inverse modelling codes were used to calibrate a model of the Pauzhetsky geothermal field based on natural-state and 1960–2006 exploitation data. We identified and estimated key model parameters, i.e. geothermal reservoir fracture porosity, initial natural upflow, base-layer porosity and the permeabilities of the hydraulic windows in the upper layer of the model (Kiryukhin et. al., 2008).

The computed heat and mass balances helped to identify the sources for the geothermal reserves in the field. The largest contribution comes from fluids stored in the reservoir, followed by meteoric water recharge, base-layer upflow, and injection waters. Model predictions for the period 2007–2032 show the possibility of maintaining steam production at an average rate on the order of 30 kg/s (total flow rate about 290 kg/s), provided that five additional make-up wells are put into operation, and that the steam transmission lines from wells 122 and 131 are improved to allow a reduction in wellhead pressures. This rate of steam production would be sufficient to support an average electricity generation of 7MW_e at the Pauzhetsky power plant (Kiryukhin et al, 2008, 2014). In view of the above, the distribution of development steam reserves (at separation pressure 2.9 bars) for the Pauzhetka geothermal field was approved by Protocol of the Federal Subsoil Resources Management Agency of the Russian Federation (ROSNEDRA) number 1606, 6 May 2008 (A+B+C1 category 25.4 kg/s, including A+B category 14.1 kg/s (56%), C1 category 11.3 kg/s (44%).

The calibrated model used for estimating overall reservoir behaviour under future production scenarios (Kiryukhin et al, 2014). The inflow of meteoric water is characteristic for the Pauzhetka field; this water makes up 30% of the total extracted fluid, which is observed not only in former areas of thermal discharge but primarily (75%) in the area of abandoned wells in the P. Pauzhetka river, where no naturally occurring discharge was observed prior to the beginning of extraction. From this it follows that some (poorly cemented) abandoned wells can conduct meteoric waters into the reservoir, cooling the productive zone and exerting a negative effect on the extraction parameters. Modelling the

operation of this field showed that the total steam productivity could be enhanced by 23.2% by isolating such artificial infiltration zones, so that the available power output of the station would require fewer extra wells.

With the turbines used at the Pauzhetka power plant consuming 4.03 kg/s steam per 1 MW of electrical energy as approved at the GKZ for the Central area of the Pauzhetka geothermal field, the development reserves are sufficient to produce 6.3 MW of electrical energy. We note that it is possible to use more effective technologies of heat carrier utilization, e.g., those for the East Mesa power plant (37 MW of electrical energy). Here a double boiling cycle is used with 1070 kg/s heat carrier and an enthalpy of 689 kJ/kg (the data are for the East Mesa power plant in 2006); the carrier is utilized to derive 59.8 kg/s steam first at a separation pressure of 3.14 bars for the first cycle, the separated water (1010.2 kg/s) is then used to get 56.89 kg/s more steam at a pressure of 1.15 bars for the second cycle. It follows that the specific steam consumption per 1 MW of electrical energy is equal to 1.62 kg/s at a pressure of 3.14 bars plus 1.54 kg/s at a pressure of 1.15 bars (a Modular 25 Mitsubishi turbine). With this technology, the Pauzhetka geothermal field would be capable of producing 11.2 MW from the operating producing wells.

Relevant project parameters are as follows:

- Extraction two-phase flow rate: 288 kg/s
- Steam rate at average separation pressure 2.9 bars (sustainable production for next 17 years has been confirmed by simulation results): 25.4 kg/s
- Conversion rate for current turbines: 4.03 kg/s steam per 1 MW_e
- Annual existing single-flash power plant ouput: 4.2 MW_e (2 x 6 MW_e installed capacity)
- Potential conversion for binary power plant at 1.15 bars separation pressure : 11.2 MW_e
- Potential steam production enhancement by 23.2% by isolating such artificial infiltration zones
- Rejected water from existing power plant: 252.6 kg/s at 132 oC (2008)
- Remaining project lifetime: 17 years
- Total available energy amount: 2.25 PJ (4.2 MW_e x 17 years).

Quantification

Electricity

Quantification of recoverable steam for the existing 6 MW_e power plant capacity during the next 17 years was based on existing production wells (56%) and projected additional five productions wells (44%). Minimization of the cold water inflow into production reservoir may yield 23% more electricity production.

In the case of a switch from single-flash to binary technology, an 87% increase in electricity production is possible.

Heat

Quantification of recoverable heat is based on the minimum value of two: (1) Potential heat demand for the district heating system Ozernovsky settlement, that is 15.0 MW_{th} (or 0.27 PJ) annually (with heating system inlet/outlet temperature: 110°C/45°C). The value above was estimated using the Paratunsky settlement operating district geothermal heating system as analog; (2) Rejected water after electricity power plant, that is defined by the mass rate of 252.6 kg/s at 132 °C (2008).

The remaining lifetime is 17 years.

Product type

There are two Energy Products: electricity and heat.

Reference Point

The reference point for electricity is the station switchyard, where gross power is exported to Ozeranaya settlement and fishery plant.

The reference point for potential heat export is the metering point for the heat distribution system in Ozernaya settlement.

Geothermal Energy Resources

Electricity for single-flash power plant

Electricity for single-flash power plant:

- Low estimate: 1.82 PJ_e (3.4 MW_e x 17 years)
- Best estimate: 3.21 PJ_e (6.0 MW_e x 17 years)
- High Estimate: 3.94 PJ_e (7.4 MW_e x 17 years)

Possible Electricity for binary power plant

Possible Electricity for binary power plant:

- Low estimate: 3.40 PJ_e (6.3 MW_e x 17 years)
- Best estimate: 5.99 PJ_e (11.2 MW_e x 17 years)
- High estimate: 7.37 PJ_e (13.8 MW_e x 17 years)

Heat

Heat:

- Low estimate: 20.7 PJ_{th} (38.6 MW_{th} x 17 years)
- Best estimate: 36.9 PJ_{th} (68.7 MW_{th} x 17 years)
- High estimate: 45.4 PJ_{th} (84.8 MW_{th} x 17 years)

UNFC-2009 classification

Classification	*Energy Quantity*	*Supplemental information*
UNFC-2009 Class	**Commodity: Electricity**	The Pauzhetsky plant has generated electricity continuously since 1966. Expected remaining lifetime: 17 years.
E1.1; F1.1; G1	1.82 PJ_e	Conservative estimate based on 44% reduction in availability due to production wells decline.
E1.1; F1.1; G2	1.39 PJ_e	Incremental energy based on continued output from existing production wells and in case of five additional make-up wells will be drilled.
E1.1; F1.1; G3	0.73 PJ_e	Incremental energy based on continued output from existing production wells, in case of five additional make-up wells will be drilled and in case of isolating artificial infiltration cold water zone.

E category classification and subclassification

Category	*UNFC-2009 definition*	*Reasoning for classification*
E1	Extraction and sale is economic on the basis of current market conditions and realistic assumptions of future market conditions.	Plant is now commercially producing for the Ozernaya settlement and fishery processing plant through a market scheme guaranteed for the life of the plant.
Sub-category	*UNFC-2009 definition*	
E1.1	Extraction and sale is economic on the basis of current market conditions and realistic assumptions of future market conditions.	

F category classification and subclassification

Category	*UNFC-2009 definition*	*Reasoning for classification*
F1	Feasibility of extraction by a defined development project or mining operation has been confirmed.	Energy is being successfully extracted and converted to electricity at the required commercial rate.
Sub-category	*UNFC-2009 definition*	
F1.1	Extraction is currently taking place.	

G category classification and subclassification

Category	*UNFC-2009 definition*	*Reasoning for classification*
G1	Quantities associated with a known deposit that can be estimated with a high level of confidence.	The system is currently producing. Production wells maintain total mass flow rate 220–260 kg/s since 1975. The TOUGH2 forward and iTOUGH2 inverse modelling codes were used to calibrate a model of the Pauzhetsky geothermal field based on natural-state and 1960–2006 exploitation data. Thus, the Pauzhetsky Geothermal Energy Source can be considered "known" and all resources are classified as G1, G2 and G3. While modelling has given a high level of confidence that 56% of the steam production rate will be sustained from existing production wells over the life of the plant (G1), there is uncertainty in the availability of the rest 44% steam production, which requires additional five make-up wells drilling (G2). The inflow of meteoric water from some (poorly cemented) abandoned wells can conduct meteoric waters into the reservoir, cooling the productive zone and exerting a negative effect on the extraction parameters. Modelling the operation of this field showed that the total steam productivity could be enhanced by 23.2% by isolating such artificial infiltration zones (G3).
G2	Quantities associated with a known deposit that can be estimated with a moderate level of confidence.	
G3	Quantities associated with a known deposit that can be estimated with a low level of confidence.	

Classification	*Energy Quantity*	*Supplemental information*
UNFC-2009 Class	**Commodity: Electricity**	The Pauzhetsky plant could generate additional electricity if the switch from single-flash to binary technology would be implemented.
E2; F1.3; G1	3.40 PJ_e	Conservative estimate based on 44% reduction in availability due to existing production wells decline.
E2; F1.3; G2	2.59 PJ_e	Incremental energy based on continued output from existing production wells and in case of five additional make-up wells will be drilled.
E2; F1.3; G3	1.38 PJ_e	Incremental energy based on continued output from existing production wells, in case of five additional make-up wells will be drilled and in case of isolating artificial infiltration cold water zone.

E category classification and subclassification

Category	*UNFC-2009 definition*	*Reasoning for classification*
E2	Extraction and sale is expected to become economically viable in the foreseeable future.	There is a reasonable likelihood that switch from single-flash to binary technology will be implemented in the foreseeable future.

F category classification and subclassification

Category	*UNFC-2009 definition*	*Reasoning for classification*
F1	Feasibility of extraction by a defined development project or mining operation has been confirmed	With binary technology, the Pauzhetka geothermal field would be capable of producing 11.2 MW from the operating producing wells and additional make-up wells during the next 17 years operational life time.
Sub-category	*UNFC-2009 definition*	
F1.3	Sufficiently detailed studies have been completed to demonstrate the feasibility of extraction by implementing a defined development project or mining operation.	

G category classification and subclassification

Category	*UNFC-2009 definition*	*Reasoning for classification*
G1	Quantities associated with a known deposit that can be estimated with a high level of confidence.	The system is currently producing. Production wells maintain total mass flow rate 220–260 kg/s since 1975. The TOUGH2 forward and iTOUGH2 inverse modelling codes were used to calibrate a model of the Pauzhetsky geothermal field based on natural-state and 1960–2006 exploitation data. Thus, the Pauzhetsky Geothermal Energy Source can be considered "known" and all resources are classified as G1, G2 and G3. While modelling has given a high level of confidence that 56% of the steam production rate will be sustained from existing production wells over the life of the plant (G1), there is uncertainty in the availability of the rest 44% steam production, which requires additional five make-up wells drilling (G2). The inflow of meteoric water from some (poorly cemented) abandoned wells can conduct meteoric waters into the reservoir, cooling the productive zone and exerting a negative effect on the extraction parameters. Modelling the operation of this field showed that the total steam productivity could be enhanced by 23.2% by isolating such artificial infiltration zones (G3).
G2	Quantities associated with a known deposit that can be estimated with a moderate level of confidence.	
G3	Quantities associated with a known deposit that can be estimated with a low level of confidence.	

Classification	*Energy Quantity*	*Supplemental information*
UNFC-2009 Class	**Commodity: Heat**	The construction of a district heating network in the Ozernovsky settlement (2,000 people) and Fishery plant is currently in the planning phase.
E2; F1.3; G1	8.03 PJ_{ht}	Minimum rejected water mass rate after electricity PP, that is defined during the rest of the project lifetime (17 years) is 136.4 kg/s at 132 °C (G1) is more than the heat demand from the district heating network, that is 15 MW_{ht} annually.

E category classification and subclassification

Category	*UNFC-2009 definition*	*Reasoning for classification*
E2	Extraction and sale is expected to become economically viable in the foreseeable future.	There is a reasonable likelihood that construction of a district heating network in Ozernaya settlement (2,000 people) and Fishery plant will be implemented in the foreseeable future.

F category classification and subclassification

Category	*UNFC-2009 definition*	*Reasoning for classification*
F1	Feasibility of extraction by a defined development project has been confirmed.	A district heating network at Ozernovsky settlement is currently in the planning phase. The technology has already been demonstrated at analogous projects within the Paratunsky Graben.
Sub-category	*UNFC-2009 definition*	
F1.3	Sufficiently detailed studies have been completed to demonstrate the feasibility of extraction by implementing a defined development project.	

G category classification and subclassification

Category	*UNFC-2009 definition*	*Reasoning for classification*
G1	Quantities associated with a known deposit that can be estimated with a high level of confidence.	Minimum rejected water mass rate after electricity PP, that is defined during the rest of the project lifetime (17 years) is 136.4 kg/s at 132 °C (G1)
G2	Quantities associated with a known deposit that can be estimated with a moderate level of confidence.	
G3	Quantities associated with a known deposit that can be estimated with a low level of confidence.	

References

Kiryukhin A.V., Asaulova N.P., Finsterle S. Inverse modelling and forecasing for the exploitation of the Pauzhetsky geothermal field, Kamchatka, Russia, Geothermics, V. 37, p. 540-562, 2008.

А.В.Кирюхин, Н.П. Асаулова, Ю.Ф. Манухин, Т.В. Рычкова, В.М. Сугробов ИСПОЛЬЗОВАНИЕ ЧИСЛЕННОГО МОДЕЛИРОВАНИЯ ДЛЯ ОЦЕНКИ ЭКСПЛУАТАЦИОННЫХ ЗАПАСОВ МЕСТОРОЖДЕНИЙ ПАРОГИДРОТЕРМ (на примере Паужетского геотермального месторождения) // Вулканология и сейсмология, №1, 2010, с.56-76.

A.V. Kiryukhin, N.P. Asaulova, Yu.F. Manukhin, T.V. Rychkova, V.M. Sugrobov, Using Numerical Modelling for Assessing the Recoverable Reserves of a Geothermal Steam Field: The Pauzhetka Geothermal Field. 2010, published in Vulkanologiya i Seismologiya, 2010, Vol. 4, No. 1, pp. 56–71.

А.В. Кирюхин, Н.П. Асаулова, О.Б. Вереина, А.Ю. Поляков ОЦЕНКА ВЛИЯНИЯ ИНФИЛЬТРАЦИИ ПРИ ЭКСПЛУАТАЦИИ ВЫСОКОТЕМПЕРАТУРНЫХ ГЕОТЕРМАЛЬНЫХ МЕСТОРОЖДЕНИЙ (ПАУЖЕТСКОГО И МУТНОВСКОГО МЕСТОРОЖДЕНИЙ, КАМЧАТКА, РОССИЯ) // «Вулканология и сейсмология», 2014, №3, с.24-36.

A.V. Kiryukhin, N.P. Asaulova, O.B. Vereina, A.Yu. Polyakov Estimating the Influence of Filtering during the Operation of the Pauzhetka and Mutnovskii High_Temperature Geothermal Fields, Kamchatka, Russia// Journal of Volcanology and Seismology, 2014, Vol. 8, No. 3, pp. 156–167.

Case Study 13: Krafla Geothermal Field

Project Location: Krafla, Iceland
Data date: 2016
Date of evaluation: September 2016
Quantification method: Simulation
Estimate type (deterministic/probabilistic): Deterministic

Project summary

The Krafla region in north-east Iceland, located in the North Atlantic Rift Zone, has long been known for its volcanic and geothermal activity. The first geothermal research study of the area was conducted in 1969. Aeromagnetic maps were produced and the geothermal system was estimated to be at 200–300°C. During 1971 and 1972, resistivity surveying was conducted and the first two exploration wells were subsequently drilled in 1974. The decision to build a 60 MW power plant was made that same year and construction started in 1975. Concurrently the 1975–1984 Krafla volcanic episode (Krafla Fires) started.

Ongoing exploration of the Krafla reservoir revealed an unusually complex system. The conceptual model for the reservoir is divided into several compartments that differ greatly e.g. in terms of temperature, enthalpy, fluid chemistry and permeability. This complexity, along with the Krafla Fires and market-related issues, caused considerable delay in project completion. The power plant started production of 7 MW in 1978, climbing to 30 MW in 1984. Finally, the second turbine started operation in 1999, bringing the total production capacity to 60 MW (Weisenberger et. al., 2015).

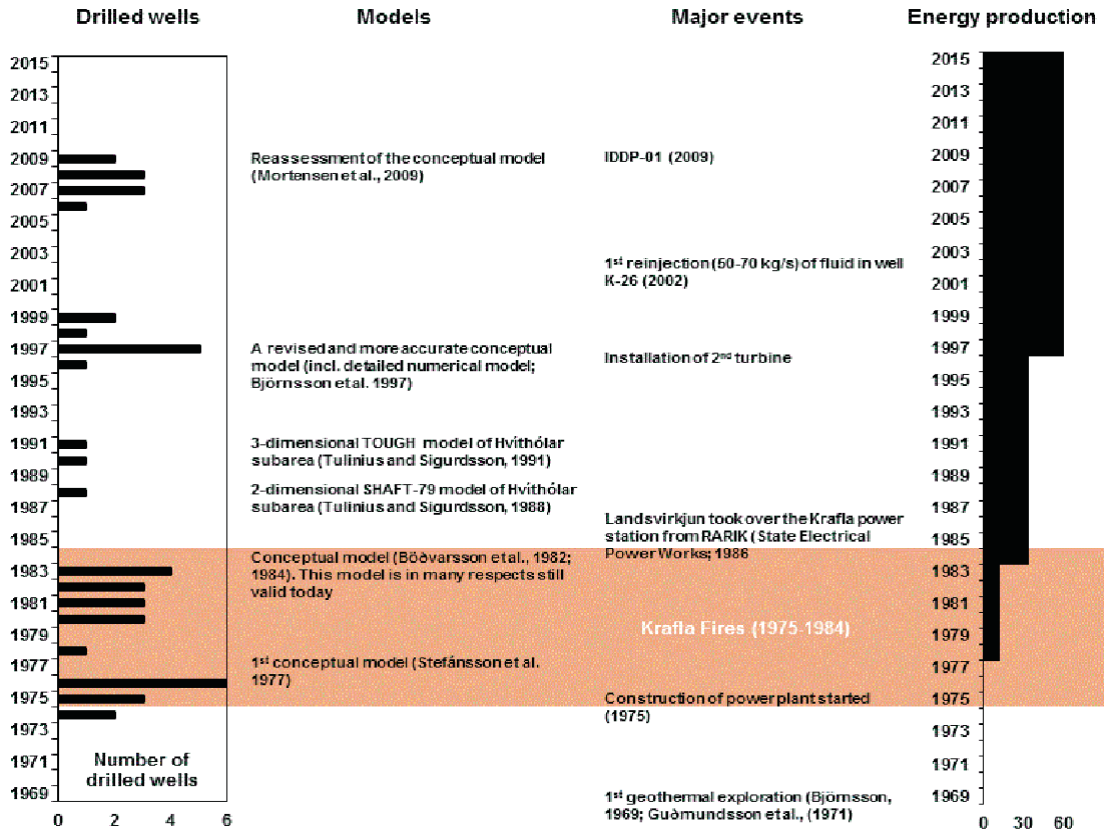

Historical overview of the Krafla geothermal power plant in the Krafla geothermal system (Weisenberger et. al., 2015).

Today (2016) the Krafla power plant is run by Landsvirkjun (National Power Company of Iceland) and at a capacity of 60 MW_e(net) with steam maintenance from workovers and occasional drilling of make-up wells. The project reported here is based on an assumption of continued operation for the next 30 years, with continued steam supply coming from make-up wells. A total of 42 wells have been drilled in the field at this time, although the plant is run on only half of those wells. Some of the wells that are not utilized have been abandoned, while others have revealed unexploited and potentially favourable parts of the resource and could be utilized for the current power plant.

No permitting or regulatory issues are expected to constrain continued operation in the area. Thus, for the purpose of this example, the simplification is made that the project lifetime is determined by the estimated depreciation time of the power plant. Landsvirkjun has investigated some options for expanding the power plant, adding topping stations and bottoming cycles, but none of those are being considered in the project reported here.

A TOUGH2 reservoir simulation model has been set up to investigate plausible 30 year production scenarios and predict at what point declining reservoir productivity might halt further steam maintenance operations. This reservoir model was based on the revised conceptual model of Weisenberger et. al. (2015) along with the production history recorded over the past four decades. The model was created with relatively low gridblock resolution, as it was meant as a preliminary model for estimating the production capacity of the peripheral zones of the currently utilized area.

In an effort to quantify the uncertainty in predictions based on the simulation model, some experimentation was carried out to produce optimistic and pessimistic versions of the model without much compromise in the fit to available data (Berhet et al., 2016a). Each of the three versions of the model (pessimistic, base case and optimistic) were then used to simulate production from the reservoir throughout the project lifetime. In these simulation scenarios, an automated test was carried out before adding each make-up well to investigate whether the investment would provide sufficient payback to justify drilling the well. If this test revealed that the make-up well should not be drilled, then all make-up well drilling was abandoned and the production of the power plant was allowed to decline until the end of the project lifetime.[4]

This assessment was made largely with publicly available information, but with assumptions regarding economic factors that were not readily available at the time of this study.

Quantification

Forecast runs (Þorvaldsson et al., 2016) showed that for the current utilization at Krafla (60 MW_e(net) power plant, max production capacity 63 MW_e(net)) make-up wells would continue to be drilled for:

- 10 years for the pessimistic case,
- 19 years for the base case,
- 18 years for the optimistic case.

[4] In this simple example (created specifically for the UNFC project), it was assumed that each well cost 7.5 m$ (includes associated cost e.g. for failed wells and steam gathering), the energy price was fixed at 43 $/MWh and a discount rate of 10% per annum was used. Technically, the decision to drill a make-up well would also be influenced by other items such as O&M cost, opportunity cost of not fully utilizing the investment in well and the power plant capacity, possible variability in energy price, well productivity etc. These items were not considered, however, in this example case study.

The cumulative energy produced over the project lifetime for each of these scenarios amounts to:

- 55.1 PJ for the pessimistic case,
- 56.5 PJ for the base case,
- 57.5 PJ for the optimistic case.

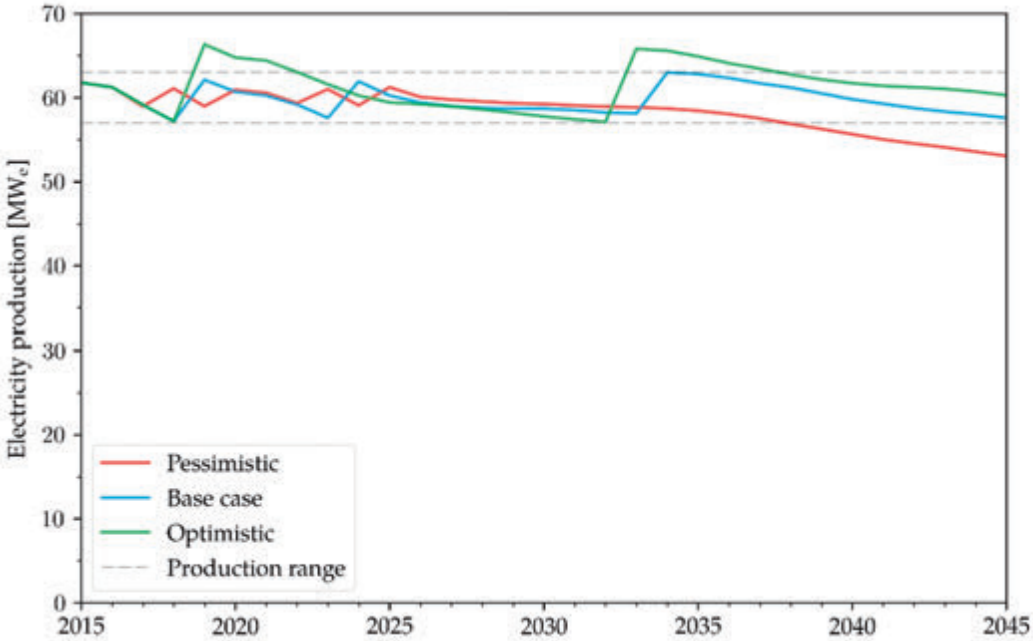

Future production scenarios for utilization of the Krafla geothermal field (Þorvaldsson et. al., 2016).

The quantification estimate derives from a reservoir simulation model as described in the Project Summary. This is a deterministic assessment, with three separate development plans tested, each corresponding to given assumptions about uncertain key parameters in the model. The simulation method takes into account the interplay between uncertain properties of the reservoir and economic constraints on drilling of make-up wells. This is what leads to the variability in total energy production over the project lifetime, which in this case is relatively low (within 2.5% of the base case estimate).[5]

The economic assumptions in the model are for the operation of a dual-flash geothermal power station supplying power onto Iceland's national grid. The developer is an electricity generator and wholesaler with market access via the grid.

Product type

The product produced is electricity.

Reference Point

The reference point is at the station switchyard, where power is exported into the national grid. Internal power use has already been subtracted.

[5] Note that the uncertainty in the reservoir parameters also leads to considerable variability in the future profitability of the project. This variability, however, is not reported as part of the UNFC.

UNFC-2009 classification

E category classification and subclassification

Category	*UNFC-2009 definition*	*Reasoning for classification*
E1	Extraction and sale has been confirmed to be economically viable	The project has been operating since 1978, and has produced at the current 60 MW capacity since 1999. No barriers to continued extraction are foreseeable at the time of this assessment.
Sub-category	*UNFC-2009 definition*	
E1.1	Extraction and sale is economic on the basis of current market conditions and realistic assumptions of future market conditions	

F category classification and subclassification

Category	*UNFC-2009 definition*	*Reasoning for classification*
F1	Feasibility of extraction by a defined development project or mining operation has been confirmed	The project is already operating and selling energy to the Icelandic national grid.
Sub-category	*UNFC-2009 definition*	
F1.1	Extraction is currently taking place.	

G category classification and subclassification

Category	*UNFC-2009 definition*	*Reasoning for classification*
G1	Quantities associated with a known deposit that can be estimated with a high level of confidence.	Quantification was based on a TOUGH2 reservoir simulation model that was populated with parameters that fit the available data, but lead to low recoverability estimates where data is lacking.
G2	Quantities associated with a known deposit that can be estimated with a moderate level of confidence.	Quantification was based on a TOUGH2 reservoir simulation model that was populated with parameters that fit the available data, but lead to moderate recoverability estimates where data is lacking.
G3	Quantities associated with a known deposit that can be estimated with a low level of confidence.	Quantification was based on a TOUGH2 reservoir simulation model that was populated with parameters that fit the available data, but lead to high recoverability estimates where data is lacking.

UNFC-2009 Geothermal Energy Resources

Classification: UNFC-2009 Class	*Energy Quantity*	*Supplemental information*
E1.1; F1.1; G1	55.1 PJ	Pessimistic reservoir model – 60 MW_e until make-up well drilling is halted in year 10
E1.1; F1.1; G2	1.4 PJ	Base case reservoir model – 60 MW_e until make-up well drilling is halted in year 19
E1.1; F1.1; G3	1.0 PJ	Optimistic reservoir model – 60 MW_e until make-up well drilling is halted in year 18

References

Jean-Claude Berthet, Valdís Guðmundsdóttir, Gunnar Þorgilsson, Andri Arnaldsson, 2016a, "Simulation of the Krafla geothermal system - Resource assessment of shallow peripheral zones", Vatnaskil 16.02, ISOR-2016/011. Available at http://gogn.lv.is/files/2016/simulation_of_krafla_geothermal_system.pdf

Lárus Þorvaldsson, Jean-Claude Berthet, Andri Arnaldsson, 2016b, "Energy extraction in 60 MW_e and 110 MW_e Krafla scenarios", Vatnaskil Memo No. 16.14. Available at http://gogn.lv.is/files/2016/krafla_UNFC_memo.pdf

Tobias Björn Weisenberger, Guðni Axelsson, Andri Arnaldsson, Anett Blischke, Finnbogi Óskarsson, Halldór Ármannsson, Hanna Blanck, Helga Margrét Helgadóttir, Jean-Claude C. Berthet, Knútur Árnason, Kristján Ágústsson, Sigríður Sif Gylfadóttir and Valdís Guðmundsdóttir, 2015, "Revision of the Conceptual Model of the Krafla Geothermal System", ÍSOR-2015/012, Vatnaskil 15.03, LV-2015-040. Available at http://www.landsvirkjun.is/Media/2015-040.pdf.

Case Study 14: Krafla Geothermal Field – 50 MW Power Expansion

Project Location: Krafla, Iceland
Data date: 2016
Date of evaluation: September 2016
Quantification method: Simulation
Estimate type (deterministic/probabilistic): Deterministic

Project summary

The Krafla region in north-east Iceland, located on the North Atlantic Rift Zone, has long been known for its volcanic and geothermal activity. The first geothermal research study of the area was conducted in 1969. Aeromagnetic maps were produced and the geothermal system was estimated to be at 200–300°C. During 1971 and 1972, resistivity surveying was conducted and the first two exploration wells were subsequently drilled in 1974. The decision to build a 60 MW power plant was made that same year and construction started in 1975. Concurrently the 1975–1984 Krafla volcanic episode (Krafla Fires) started.

Ongoing exploration of the Krafla reservoir revealed an unusually complex system. The conceptual model for the reservoir is divided into several compartments that differ greatly e.g. in terms of temperature, enthalpy, fluid chemistry and permeability. This complexity, along with the Krafla Fires and market-related issues, caused considerable delay in project completion. The power plant started production of 7 MW in 1978, climbing to 30 MW in 1984. Finally, the second turbine started operation in 1999, bringing the total production capacity to 60 MW (Weisenberger et. al., 2015).

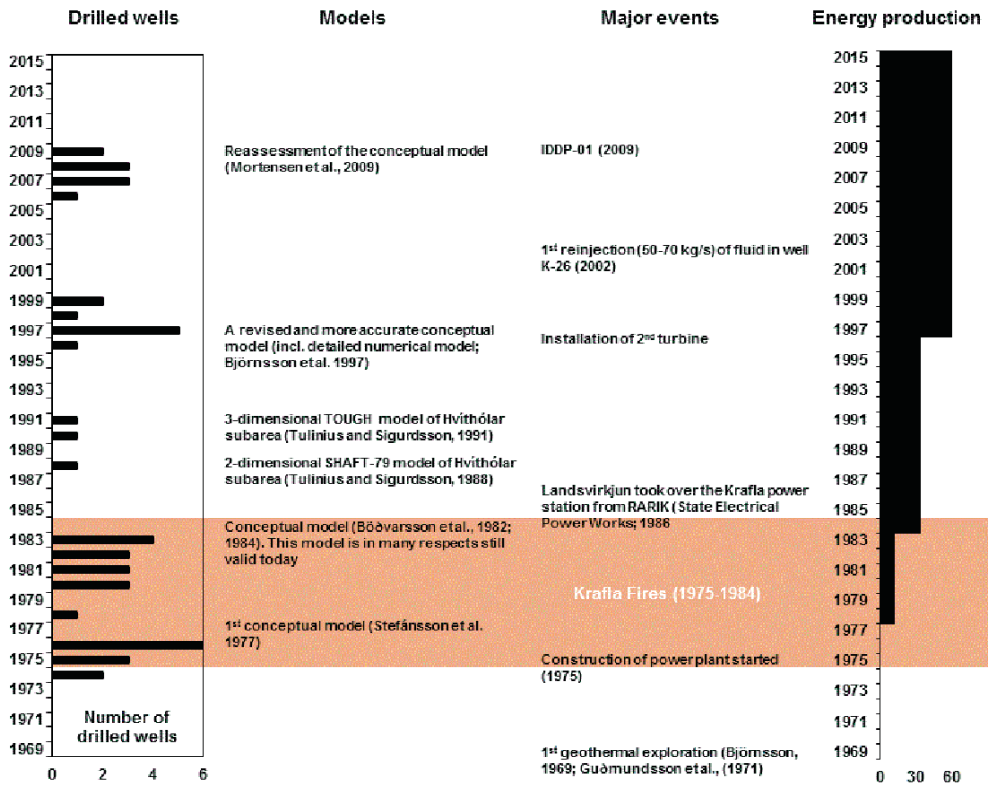

Historical overview of the Krafla geothermal power plant in the Krafla geothermal system (Weisenberger et. al., 2015).

Today (2016), the Krafla power plant is run by Landsvirkjun (National Power Company of Iceland) and at a capacity of 60 MW_e(net) with steam maintenance from workovers and occasional drilling of make-up wells. The project reported here is based on plans for expanded electrical power generation capacity of 50 MW. It is assumed that the new power station would run alongside the current 60 MW power station for the next 30 years, with continued steam supply coming from make-up wells. A total of 42 wells have been drilled for the current station, although the plant is run on only half of those wells. Some of the wells that are not utilized have been abandoned, while others have revealed unexploited and potentially favourable parts of the resource.

Some permitting issues for the expansion are yet to be addressed, but these are not expected to impact the viability of the project heavily. Market prices and demand for electricity in Iceland are favourable for the proposed expansion, although there is some uncertainty about whether the national power grid will need to be upgraded to bring the power to market. Thus, for the purpose of this example, the simplification was made that the project lifetime was determined by the estimated depreciation time of the new power station. The power station being considered for the project reported here is a single-flash power cycle with evaporative cooling.

A TOUGH2 reservoir simulation model has been set up to investigate plausible 30-year production scenarios and predict at what point declining reservoir productivity might halt further steam maintenance operations. This reservoir model was based on the revised conceptual model of Weisenberger et. al. (2015) along with the production history recorded over the past four decades. The model was created with relatively low gridblock resolution, as it was meant as a preliminary model for estimating the production capacity of the peripheral zones of the currently utilized area.

In an effort to quantify uncertainty in the predictions some experimentation was carried out to produce optimistic and pessimistic versions of the model without much compromise in the fit to available data (Berhet et al., 2016a). Each of the three versions of the model (pessimistic, base case and optimistic) were then used to simulate production from the reservoir throughout the project lifetime. In these simulation scenarios, an automated test was carried out before adding each make-up well to investigate whether the investment would provide sufficient payback to justify drilling the well. If this test revealed that the make-up well should not be drilled, then all make-up well drilling was abandoned and the production of the power plant was allowed to decline throughout the project lifetime.[6]

This assessment was made largely with publicly available information, but with assumptions regarding economic factors that were not readily available at the time of this study.

Quantification

Forecast runs (Þorvaldsson et al., 2016) showed that for the expanded utilization at Krafla (110 MW_e(net) total power generation, max production capacity 115,5 MW_e(net)) make-up wells would continue to be drilled for:

- 14 years for the pessimistic case,
- 23 years for the base case,
- 23 years for the optimistic case.

[6] In this simple example (created specifically for the UNFC project), it was assumed that each well cost 7.5 m$ (includes associated cost e.g. for failed wells and steam gathering), the energy price was fixed at 43 $/MWh and a discount rate of 10% per annum was used. Technically, the decision to drill a make-up well would also be influenced by other items such as O&M cost, opportunity cost of not fully utilizing the investment in well and the power plant capacity, possible variability in energy price, well productivity etc. These items were not considered, however, in this example case study.

The cumulative energy produced from the 50 MW expansion is computed by subtracting the estimated production of the current 60 MW plant (as reported in Case Study 13) from the total energy produced over the project lifetime. This leads to:

- 44.9 (100.0-55.1) PJ for the pessimistic case,
- 46.9 (103.4-56.5) PJ for the base case,
- 47.5 (105.0-57.5) PJ for the optimistic case.

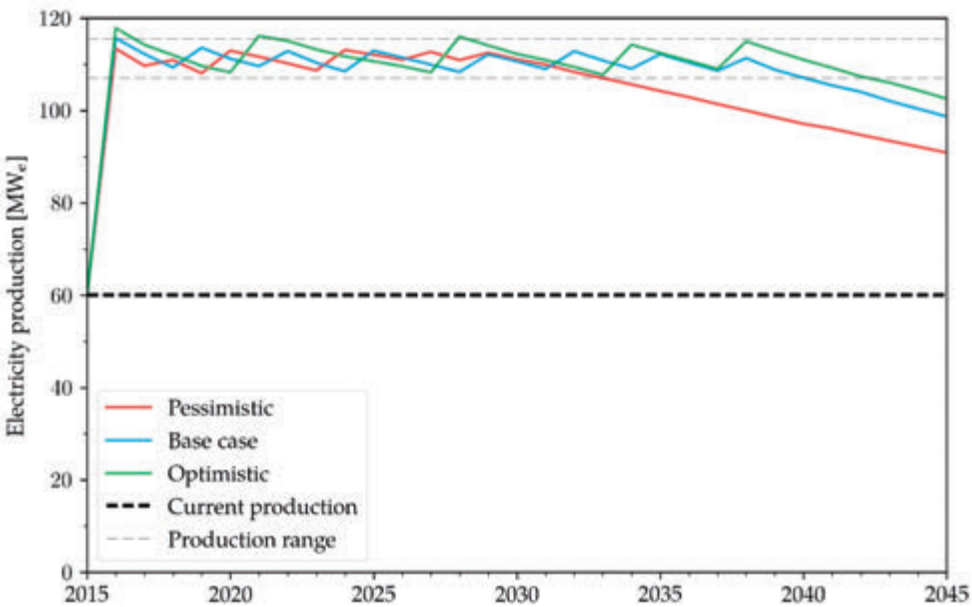

Future production scenarios for expanded utilization of the Krafla geothermal field (Þorvaldsson et. al., 2016).

The quantification estimate derives from a reservoir simulation model as described in the Project Summary. This is a deterministic assessment, with three separate development plans tested, each corresponding to given assumptions about uncertain key parameters in the model. The simulation method takes into account the interplay between uncertain properties of the reservoir and economic constraints on drilling of make-up wells. This is what leads to the variability in total energy production over the project lifetime, which in this case is within 4.5% of the base case estimate.[7]

The economic assumptions in the model are for the operation of a new 50 MW single-flash geothermal power plant. Electricity will be supplied into Iceland's national grid. The developer is an electricity generator and wholesaler with market access via the grid.

Product type

The product produced is electricity.

Reference Point

The reference point is at the station switchyard, where power is exported into the national grid. Internal power use has already been subtracted.

[7] Note that the uncertainty in the reservoir parameters also leads to considerable variability in the future profitability of the project. This variability, however, is not reported as part of the UNFC.

UNFC-2009 classification

E category classification and subclassification

Category	*UNFC-2009 definition*	*Reasoning for classification*
E2	Extraction and sale is expected to become economically viable in the foreseeable future.	Extraction has been ongoing in the Krafla area since 1978. Continued exploration and maintenance of the field has indicated that the resource would be sufficiently large to support expanded production capacity. There is still some uncertainty regarding permitting issues, market access and electricity price. At the moment, however, it is realistic to assume that these matters will be resolved such that economic extraction can take place.

F category classification and subclassification

Category	*UNFC-2009 definition*	*Reasoning for classification*
F2	Feasibility of extraction by a defined development project or mining operation is subject to further evaluation.	The data gathered from the current utilization of the field underpins a model for the reservoir that indicates a favorable resource. More detailed economic studies are required, however, to determine whether the power station should be constructed with the assumed project configuration. Such studies are underway at this time.
Sub-category	*UNFC-2009 definition*	
F2.1	Project activities are ongoing to justify development in the foreseeable future.	

G category classification and subclassification

Category	*UNFC-2009 definition*	*Reasoning for classification*
G1	Quantities associated with a known deposit that can be estimated with a high level of confidence.	Quantification was based on a TOUGH2 reservoir simulation model that was populated with parameters that fit the available data, but lead to low recoverability estimates where data is lacking.
G2	Quantities associated with a known deposit that can be estimated with a moderate level of confidence.	Quantification was based on a TOUGH2 reservoir simulation model that was populated with parameters that fit the available data, but lead to moderate recoverability estimates where data is lacking.
G3	Quantities associated with a known deposit that can be estimated with a low level of confidence.	Quantification was based on a TOUGH2 reservoir simulation model that was populated with parameters that fit the available data, but lead to high recoverability estimates where data is lacking.

UNFC-2009 Geothermal Energy Resources

Classification: UNFC-2009 Class	*Energy Quantity*	*Supplemental information*
E2; F2.1; G1	44.9 PJ	Pessimistic reservoir model – 50 MW_e expansion until make-up well drilling is halted in year 14
E2; F2.1; G2	2.0 PJ	Base case reservoir model – 50 MW_e until make-up well drilling is halted in year 23
E2; F2.1; G3	0.6 PJ	Optimistic reservoir model – 60 MW_e until make-up well drilling is halted in year 23

References

Jean-Claude Berthet, Valdís Guðmundsdóttir, Gunnar Þorgilsson, Andri Arnaldsson, 2016, "Simulation of the Krafla geothermal system - Resource assessment of shallow peripheral zones", Vatnaskil 16.02, ISOR-2016/011. Available at http://gogn.lv.is/files/2016/simulation_of_krafla_geothermal_system.pdf

Lárus Þorvaldsson, Jean-Claude Berthet, Andri Arnaldsson, 2016, "Energy extraction in 60 MW_e and 110 MW_e Krafla scenarios", Vatnaskil Memo No. 16.14. Available at http://gogn.lv.is/files/2016/krafla_UNFC_memo.pdf

Tobias Björn Weisenberger, Guðni Axelsson, Andri Arnaldsson, Anett Blischke, Finnbogi Óskarsson, Halldór Ármannsson, Hanna Blanck, Helga Margrét Helgadóttir, Jean-Claude C. Berthet, Knútur Árnason, Kristján Ágústsson, Sigríður Sif Gylfadóttir and Valdís Guðmundsdóttir, 2015, "Revision of the Conceptual Model of the Krafla Geothermal System", ÍSOR-2015/012, Vatnaskil 15.03, LV-2015-040. Available at http://www.landsvirkjun.is/Media/2015-040.pdf.

Application of the United Nations Framework Classification for Resources (UNFC) to Geothermal Energy Resources

Selected case studies

This publication includes a set of 14 case studies on the application of the United Nations Framework Classiÿcation for Resources (UNFC) to geothermal energy from Australia, Germany, Hungary, Iceland, Italy, the Netherlands, New Zealand, the Philippines and Russian Federation.

UNFC, which has been developed by the Expert Group on Resource Classiÿcation of the United Nations Economic Commission for Europe (UNECE), applies to all energy and mineral resources globally. This includes renewable energy resources, anthropogenic resources and injection projects for the geological storage of carbon dioxide.

UNFC can be applied to geothermal energy through two sets of Speciÿcations for the application of UNFC to Renewable Energy Resources and Geothermal Energy Resources developed in 2016.

The case studies are presented here to illustrate the application of the geothermal energy speciÿcations for the uniform use of UNFC in di°erent contexts.

These application examples from di°erent countries provide a range of scenarios in the classiÿcation of geothermal resources in a manner consistent with the classiÿcation of other energy resources.

Information Service
United Nations Economic Commission for Europe

Palais des Nations
CH - 1211 Geneva 10, Switzerland
Telephone: +41(0)22 917 44 44
E-mail: info.ece@unece.org
Website: http://www.unece.org

ISBN 978-92-1-117136-5

Layout and Printing at United Nations, Geneva – 1734615 **(E)** – November 2017 – 3,518 – **ECE/ENERGY/110**